Combination Meter

FOR RUSSIA

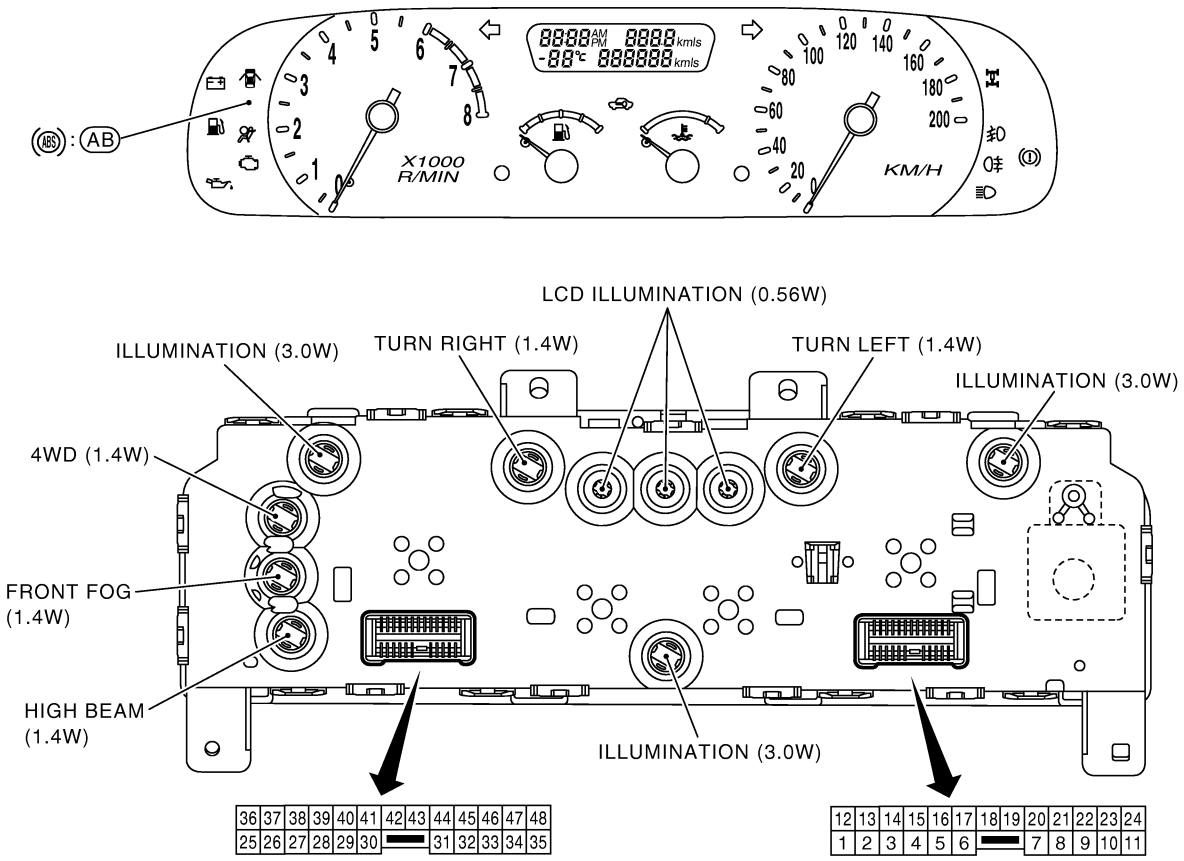

(AB) : With ABS

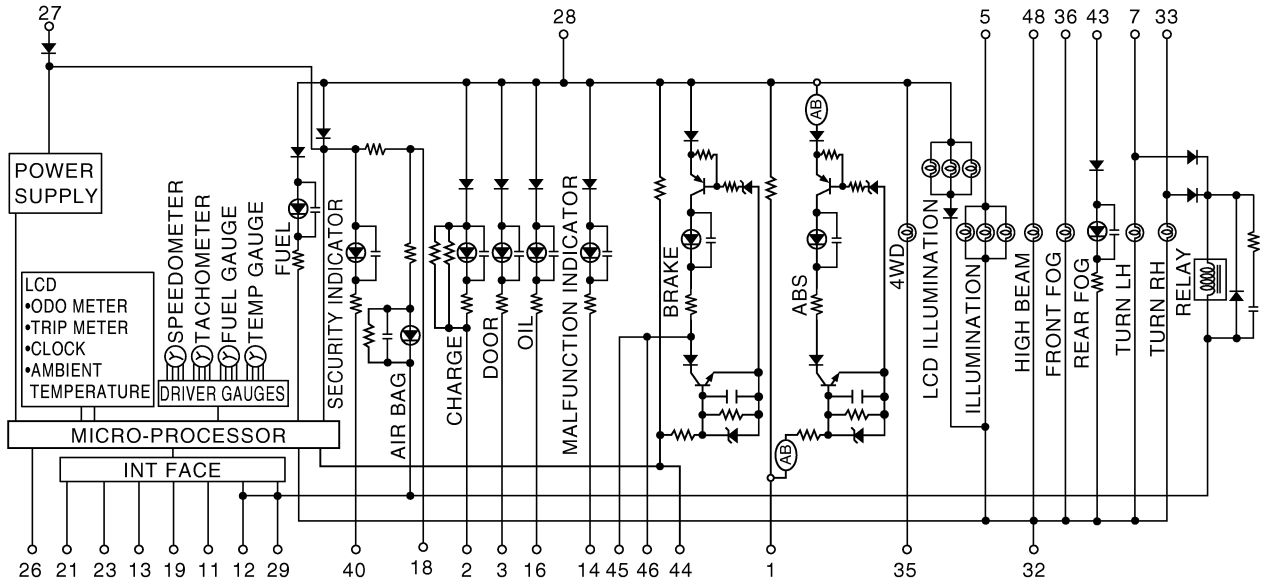

YEL627E

Tachometer, Temp. and Fuel Gauges/Wiring Diagram

FOR RUSSIA

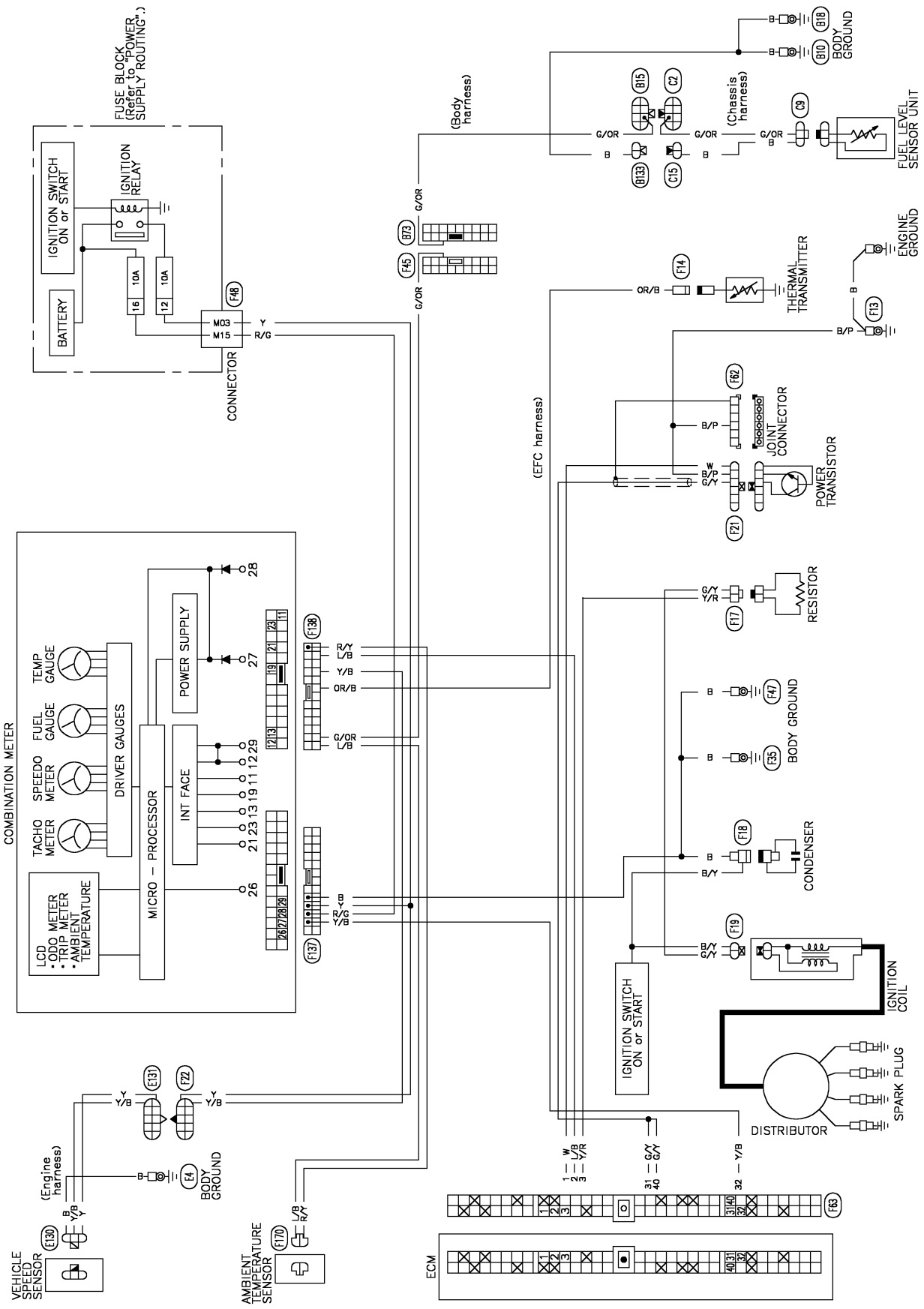

YEL688E

Warning Lamps/Schematic

FOR RUSSIA

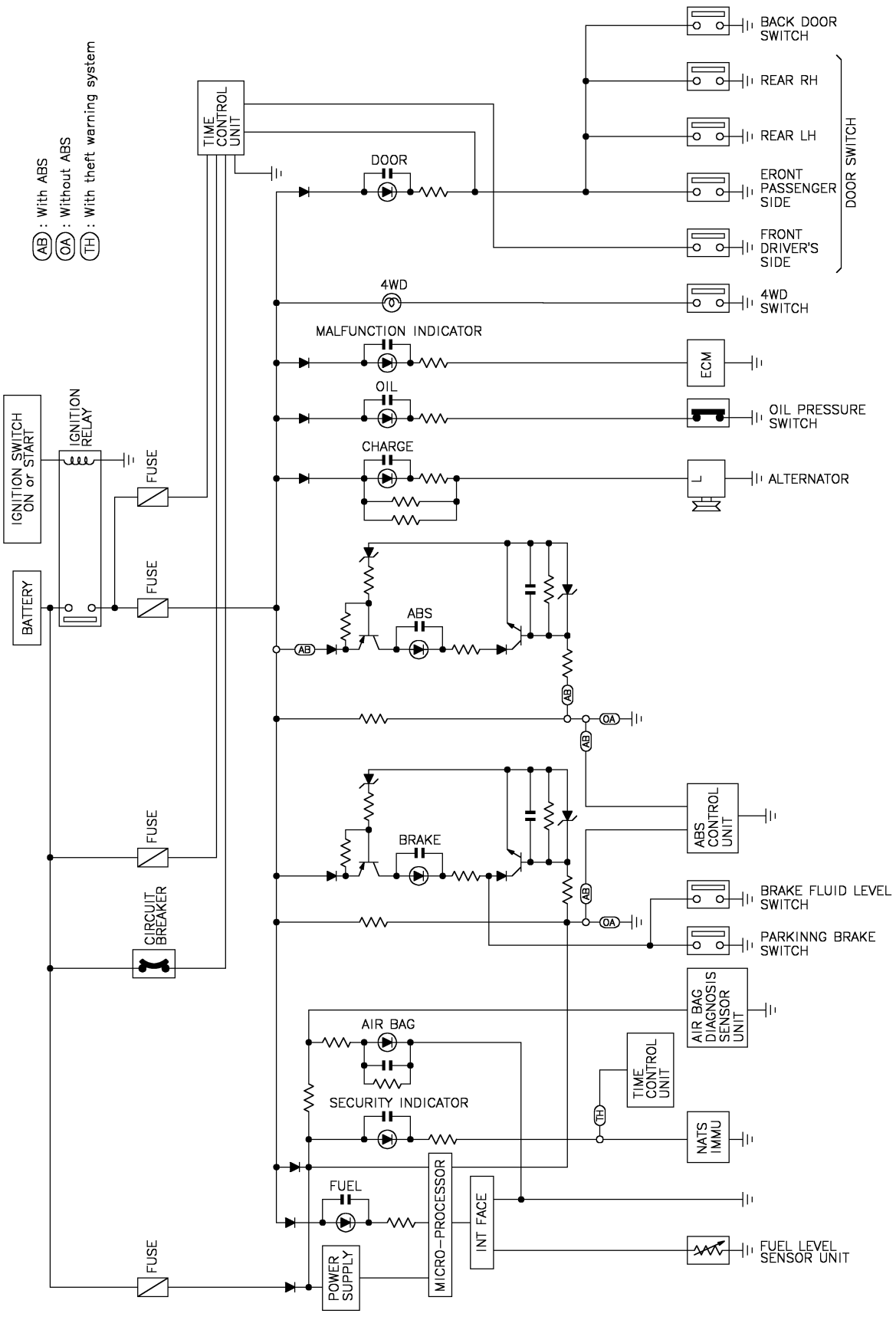

YEL690E

Warning Lamps/Wiring Diagram

FOR RUSSIA

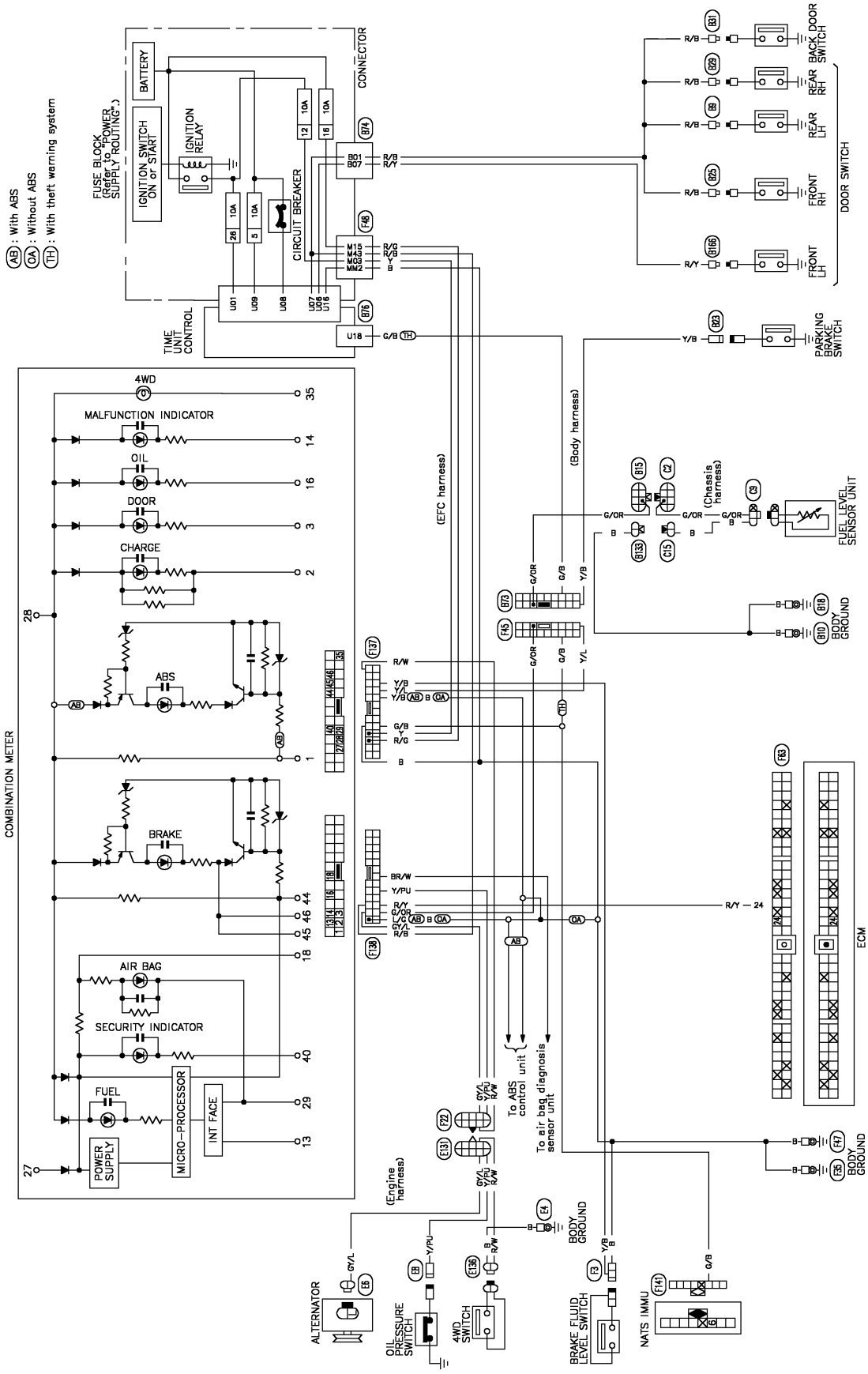

YEL691E