TOSHIBA BIPOLAR LINEAR INTEGRATED CIRCUIT SILICON MONOLITHIC

TA75339P, TA75339F, TA75339FB

QUAD COMPARATOR

This device consist of four independent voltage comparators that designed to operate from a single power supply over a wide range of voltage.
Normal Operation from dual supplies is also to be guaranteed on voltage range from 2V to 36V.
V_{CC} is necessary at least more 1.5 volts than the input common mode voltage.
The output can be connected to other open collector outputs to achieve Wired-OR relation ship.

TA75339P

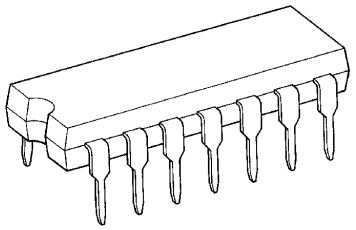

DIP14-P-300-2.54

TA75339F

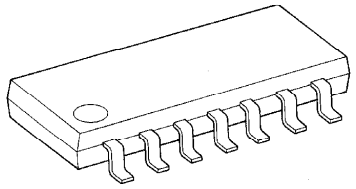

SOP14-P-225-1.27

TA75339FB

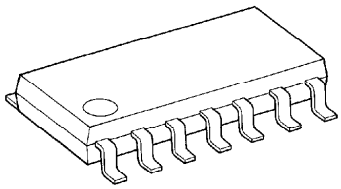

SOP14-P-225-1.27B

FEATURES

- Single Supply Voltage Range or Dual Supplies
  : 2V~36V or ±1V~18V
- Low Supply Current : 0.8mA (Typ.)
- Low Input Offset Voltage : ±2mA (Typ.)
- Wide Input Common Mode Voltage Range
  : 0V~V_{CC} – 1.5V
- Output Compatible with TTL, DTL, MOS and CMOS Logic System.
- The Output Can be Connected to Achieve Wired-OR Relation.

Weight
DIP14-P-300-2.54 : 1.0g (Typ.)
SOP14-P-225-1.27 : 0.2g (Typ.)
SOP14-P-225-1.27B : 0.2g (Typ.)

961001EBA1

- TOSHIBA is continually working to improve the quality and the reliability of its products. Nevertheless, semiconductor devices in general can malfunction or fail due to their inherent electrical sensitivity and vulnerability to physical stress. It is the responsibility of the buyer, when utilizing TOSHIBA products, to observe standards of safety, and to avoid situations in which a malfunction or failure of a TOSHIBA product could cause loss of human life, bodily injury or damage to property. In developing your designs, please ensure that TOSHIBA products are used within specified operating ranges as set forth in the most recent products specifications. Also, please keep in mind the precautions and conditions set forth in the TOSHIBA Semiconductor Reliability Handbook.
- The products described in this document are subject to foreign exchange and foreign trade control laws.
- The information contained herein is presented only as a guide for the applications of our products. No responsibility is assumed by TOSHIBA CORPORATION for any infringements of intellectual property or other rights of the third parties which may result from its use. No license is granted by implication or otherwise under any intellectual property or other rights of TOSHIBA CORPORATION or others.
- The information contained herein is subject to change without notice.

PIN CONNECTION (TOP VIEW)

TA75339P

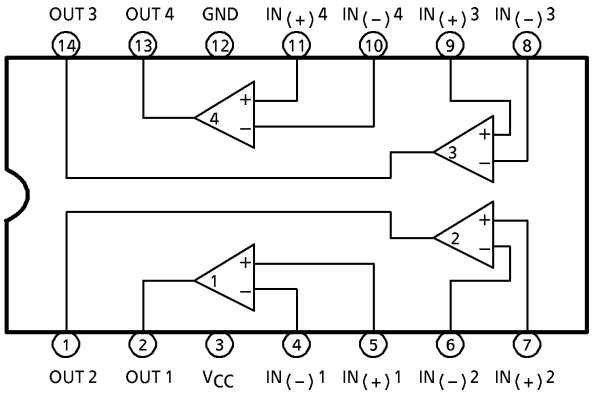

TA75339F / TA75339FB

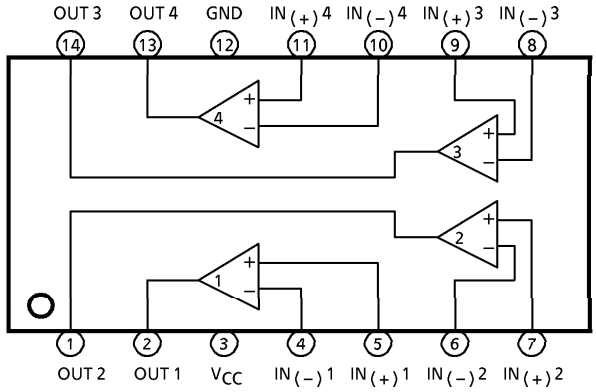

EQUIVALENT CIRCUIT

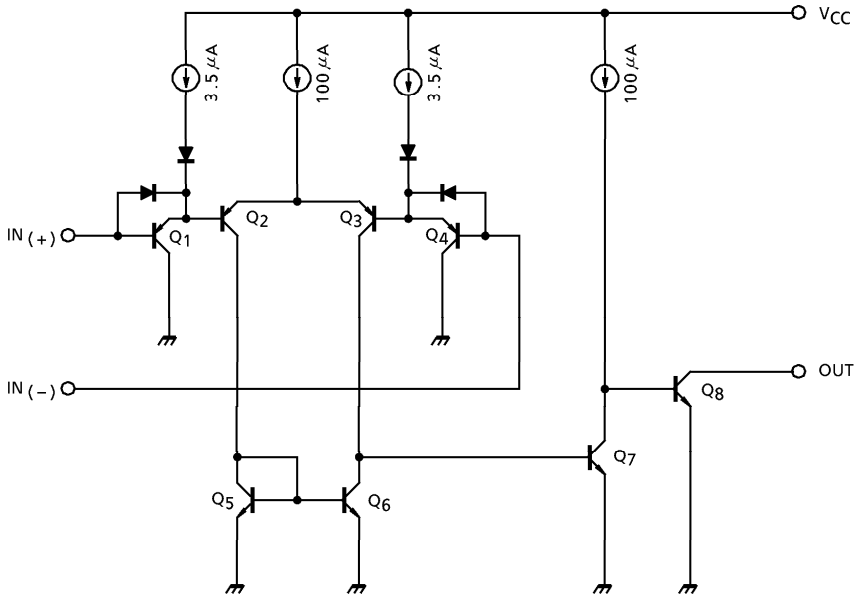

MAXIMUM RATINGS (Ta = 25°C)

CHARACTERISTIC	SYMBOL	TA75339P	TA75339F	TA75339FB	UNIT
Supply Voltage	V_{CC}	±18 OR 36	±18 OR 36	±18 OR 36	V
Differential Input Voltage	DV_{IN}	±36	±36	±36	V
Common Mode Input Voltage	CMV_{IN}	−0.3~V_{CC}	−0.3~V_{CC}	−0.3~V_{CC}	V
Power Dissipation	P_D	625	280	280	mW
Operating Temperature	T_{opr}	−40~85	−40~85	−40~85	°C
Storage Temperature	T_{stg}	−55~125	−55~125	−55~125	°C

ELECTRICAL CHARACTERISTICS (V_{CC} = 5V, Ta = 25°C)

CHARACTERISTIC	SYMBOL	TEST CIR-CUIT	TEST CONDITION	MIN.	TYP.	MAX.	UNIT
Input Offset Voltage	V_{IO}	4	—	—	2	5	mV
Input Offset Current	I_I	2	—	—	25	250	nA
Input Bias Current	I_{IO}	2	—	—	5	50	nA
Common Mode Input Voltage	CMV_{IN}	4	—	0	—	V_{CC} − 1.5	V
Voltage Gain	G_V	—	R_L = 15kΩ	—	200	—	V / mV
Supply Current	I_{CC}	1	no load	—	0.8	2	mA
Sink Current	I_{SINK}	5	$IN_{(+)}$ = 0V, $IN_{(-)}$ = 1V, V_{OL} = 1.5V	6	16	—	mA
Output Voltage ("L" level)	V_{OL}	5	$IN_{(+)}$ = 0V, $IN_{(-)}$ = 1V, I_{SINK} = 3mA	—	0.2	0.4	V
Output Leak Current	I_{LEAK}	3	$IN_{(+)}$ = 1V, $IN_{(-)}$ = 0V, V_O = 5V	—	0.1	—	nA
Response Time	t_{rsp}	6	R_L = 5.1kΩ, C_L = 15pF	—	1.3	—	μs

TEST CIRCUIT

(1) I_{CC}

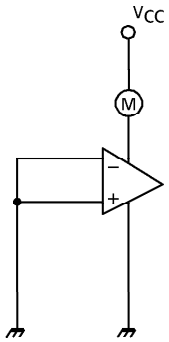

(2) I_I, I_{IO}

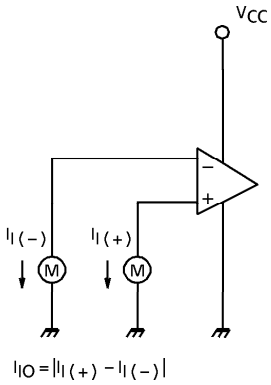

(3) I_{LEAK}

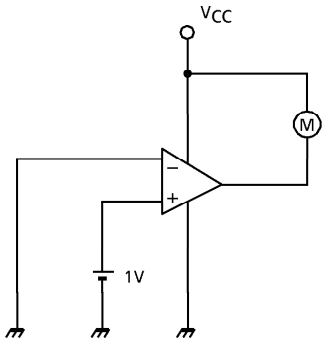

(4) V_{IO}, CMV_{IN}

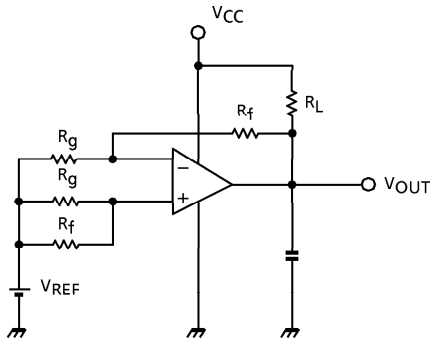

(5) I_{SINK}, V_{OL}

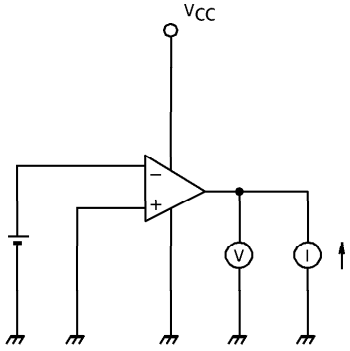

(6) t_{rsp}

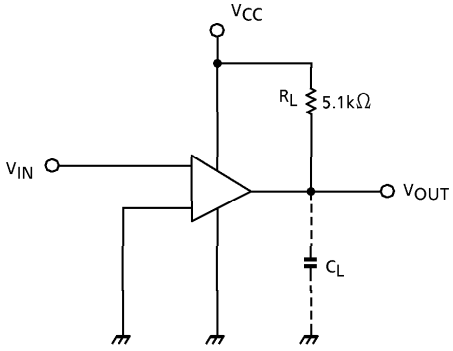

CHARACTERISTICS

V_{CC} – I_{CC}

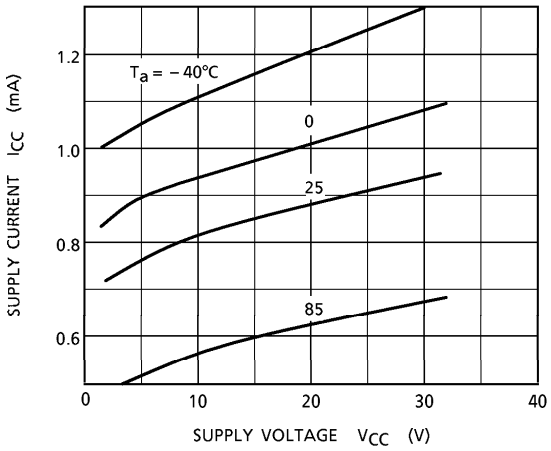

V_{CC} – I_I

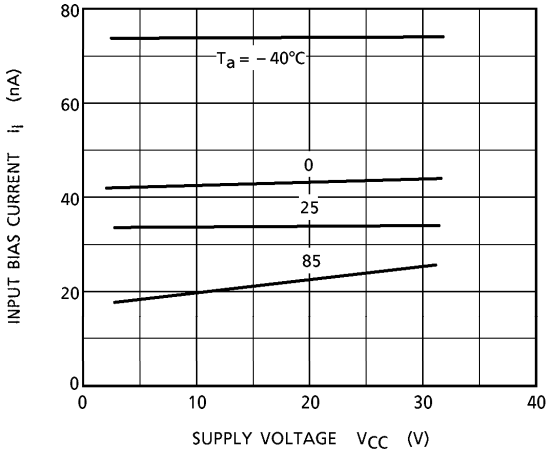

V_{OL} – I_{SINK}

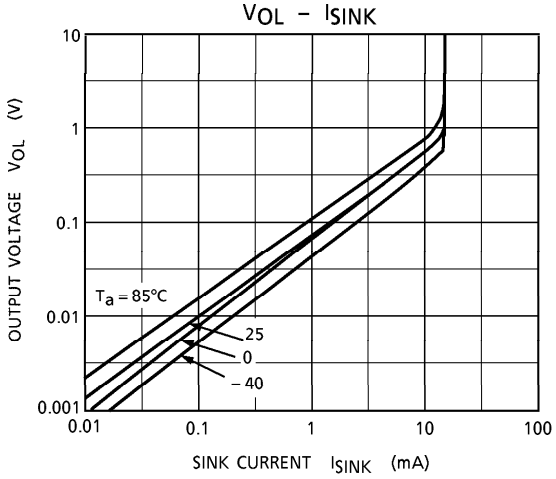

V_{IN}, V_{OUT} – t

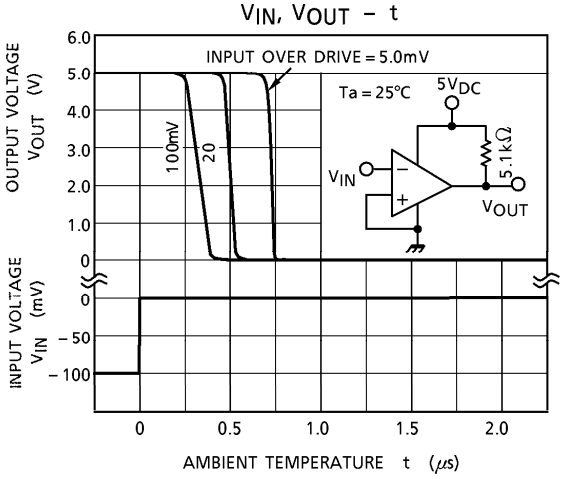

V_{IN}, – V_{OUT} – t

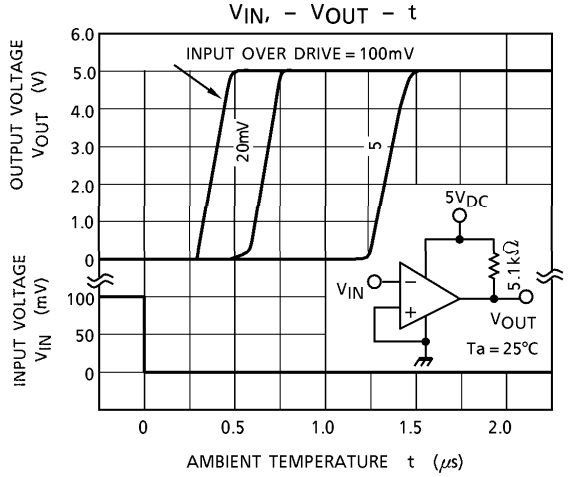

P_D – Ta

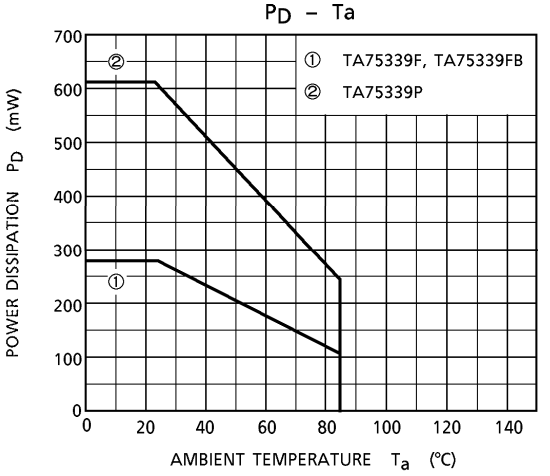

OUTLINE DRAWING

DIP14-P-300-2.54 Unit : mm

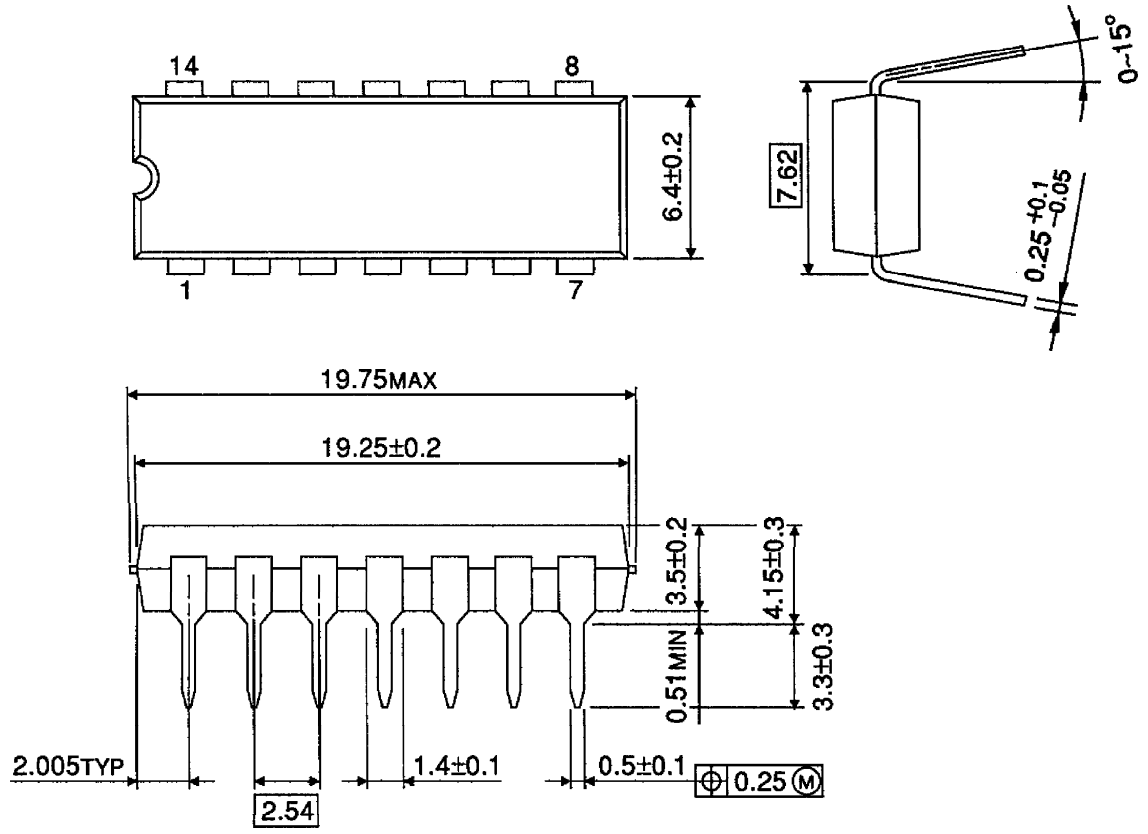

Weight : 1.0g (Typ.)

OUTLINE DRAWING

SOP14-P-225-1.27 Unit : mm

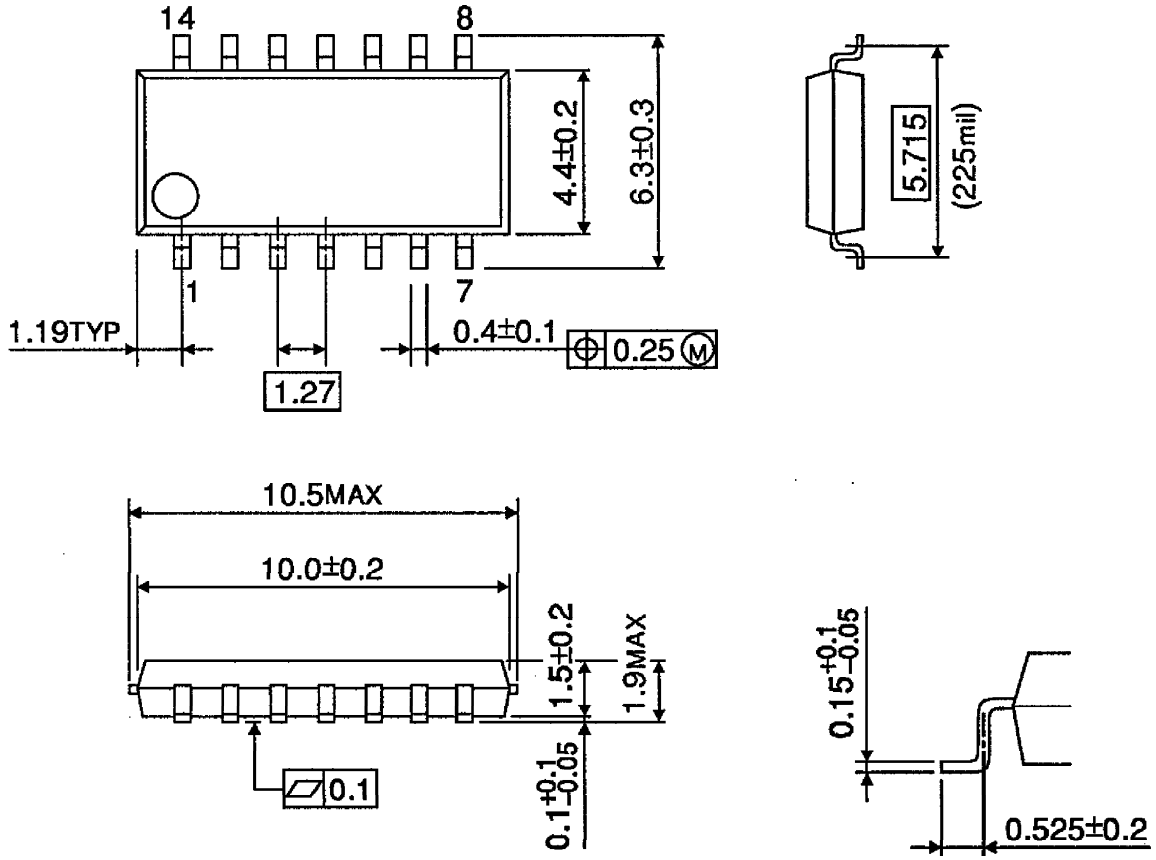

Weight : 0.2g (Typ.)

OUTLINE DRAWING

SOP14-P-225-1.27B

Unit : mm

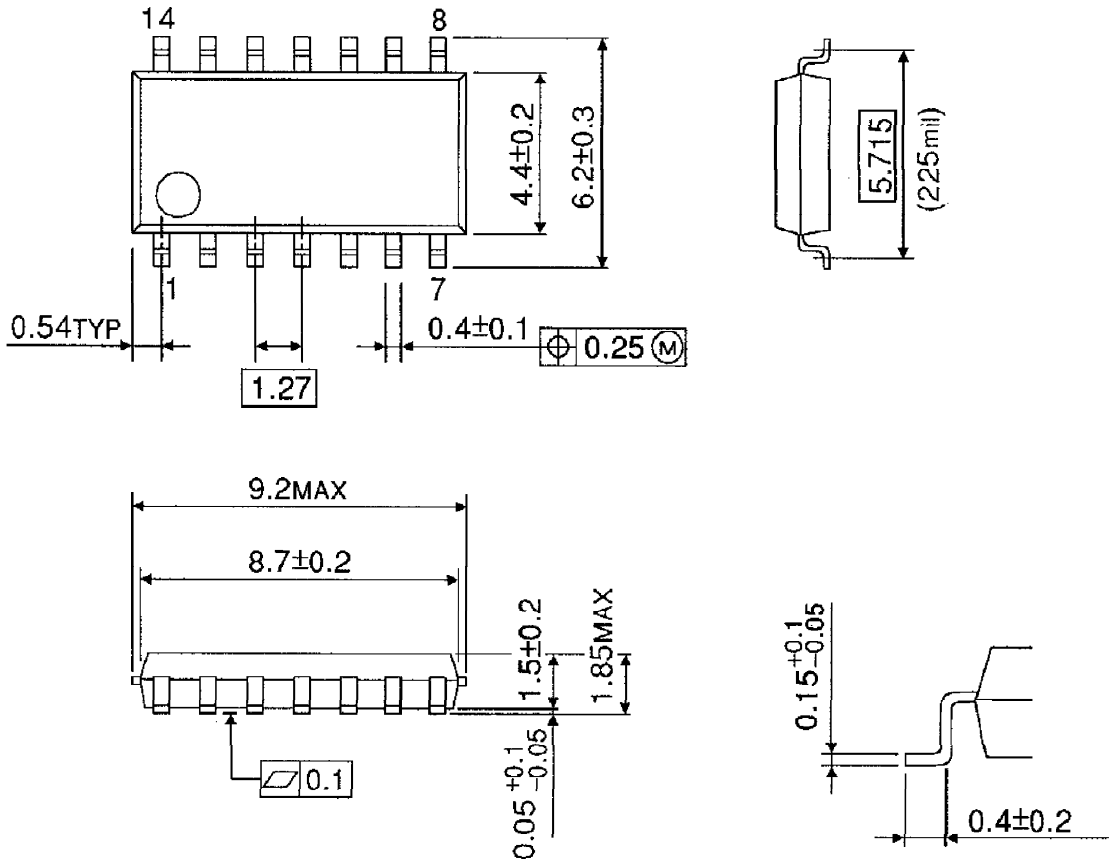

Weight : 0.2g (Typ.)

This datasheet has been downloaded from:

www.DatasheetCatalog.com

Datasheets for electronic components.