TOSHIBA BIPOLAR LINEAR INTEGRATED CIRCUIT SILICON MONOLITHIC

TA75902P, TA75902F, TA75902FB

QUAD OPERATIONAL AMPLIFIER

FEATURES

- In the linear mode the input common mode voltage range includes ground.
- Four internally compensated OP amps are in single package.
- Low power dissipation and power drain suitable for battery operation.
- Differential input voltage range equal to the power supply voltage.
- Large output voltage swing : 0V~V_{CC} – 1.5V
- Wide power supply voltage range and signal power supply : Single Supply 3~36V
  Dual Supplies ±1.5~18V
- Low input biasing current : I_I = 45nA (Typ.)

TA75902P

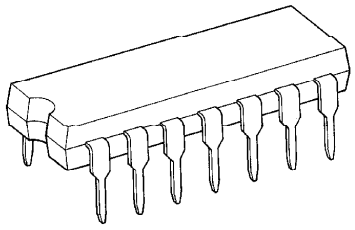

DIP14-P-300-2.54

TA75902F

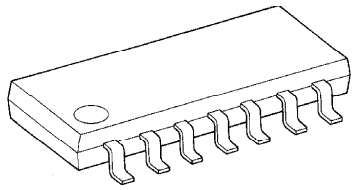

SOP14-P-225-1.27

TA75902FB

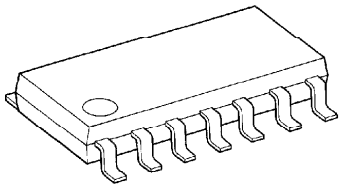

SOP14-P-225-1.27B

Weight
DIP14-P-300-2.54 : 1.0g (Typ.)
SOP14-P-225-1.27 : 0.2g (Typ.)
SOP14-P-225-1.27B : 0.2g (Typ.)

961001EBA1

- TOSHIBA is continually working to improve the quality and the reliability of its products. Nevertheless, semiconductor devices in general can malfunction or fail due to their inherent electrical sensitivity and vulnerability to physical stress. It is the responsibility of the buyer, when utilizing TOSHIBA products, to observe standards of safety, and to avoid situations in which a malfunction or failure of a TOSHIBA product could cause loss of human life, bodily injury or damage to property. In developing your designs, please ensure that TOSHIBA products are used within specified operating ranges as set forth in the most recent products specifications. Also, please keep in mind the precautions and conditions set forth in the TOSHIBA Semiconductor Reliability Handbook.
- The products described in this document are subject to foreign exchange and foreign trade control laws.
- The information contained herein is presented only as a guide for the applications of our products. No responsibility is assumed by TOSHIBA CORPORATION for any infringements of intellectual property or other rights of the third parties which may result from its use. No license is granted by implication or otherwise under any intellectual property or other rights of TOSHIBA CORPORATION or others.
- The information contained herein is subject to change without notice.

PIN CONNECTION (TOP VIEW)

TA75902P

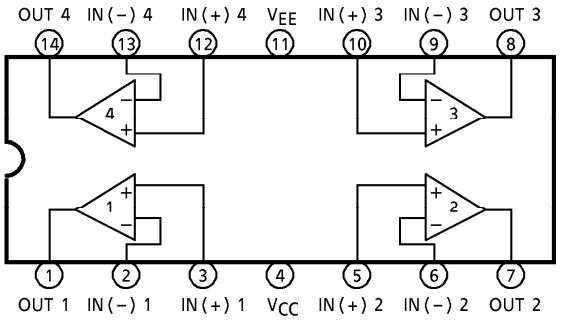

TA75902F
TA75902FB

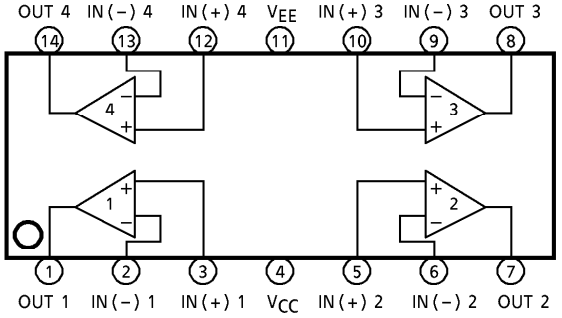

EQUIVALENT CIRCUIT

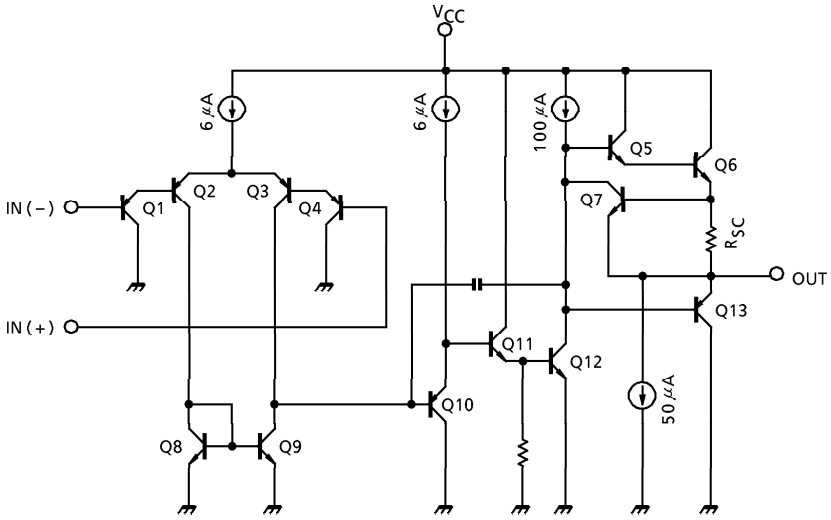

MAXIMUM RATINGS (Ta = 25°C)

CHARACTERISTIC		SYMBOL	RATING	UNIT
Supply Voltage		V_{CC}, V_{EE}	± 18 OR 36	V
Differential Input Voltage		DV_{IN}	± 36	V
Input Voltage		V_{IN}	− 0.3~36	V
Power Dissipation	TA75902P	P_D	625	mW
	TA75902F		280	
	TA75902FB		280	
Operating Temperature		T_{opr}	− 40~85	°C
Storage Temperature		T_{stg}	− 55~125	°C

ELECTRICAL CHARACTERISTICS (V_{CC} = 5V, V_{EE} = GND, Ta = 25°C)

CHARACTERISTIC	SYMBOL	TEST CIR-CUIT	TEST CONDITION	MIN.	TYP.	MAX.	UNIT
Input Offset Voltage	V_{IO}	1	$R_g \leqq 10k\Omega$	—	2	7	mV
Input Offset Current	I_{IO}	2	—	—	5	30	nA
Input Bias Current	I_I	2	—	—	45	150	nA
Common Mode Input Voltage	CMV_{IN}	3	V_{CC} = 30V, V_{EE} = GND	0	—	V_{CC} − 1.5	V
Supply Current	I_{CC}, I_{EE}	4	$R_L = \infty$, ALL OP Amps	—	0.7	1.2	mA
Voltage Gain	G_V	5	$R_L \geqq 2k\Omega$	86	100	—	dB
Maximum Output Voltage Swing	V_{Op-p}	6	$R_L = 2k\Omega$	0	—	V_{CC} − 1.5	V
Common Mode Input Signal Rejection Ratio	CMRR	3	—	60	85	—	dB
Supply Voltage Rejection Ratio	SVRR	1	$R_g = 10k\Omega$	60	100	—	dB
Source Current	I_{source}	6	IN (−) = 0V, IN (+) = 1V	20	40	—	mA
Sink Current	I_{sink}	6	IN (−) = 1V, IN (+) = 0V	10	20	—	mA

TEST CIRCUIT

(1) V_{IO}, SVRR

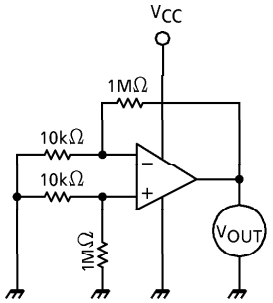

- $V_{IO} = V_{OUT} / 100$
- SVRR = 20ℓog E (dB)

$$E = \left| \frac{V_{OUT1} - V_{OUT2}}{V_{CC1} - V_{CC2}} \right| \times \frac{1}{100}$$

V_{OUT1} : V_{OUT} (V_{CC1} = 5V)
V_{OUT2} : V_{OUT} (V_{CC2} = 10V)

(2) I_I, I_{IO}

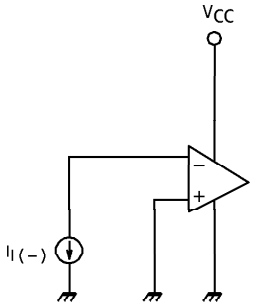

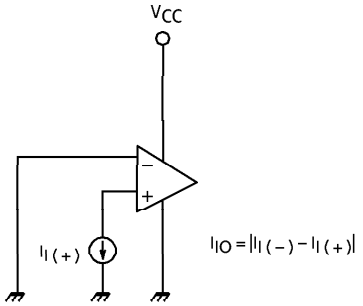

(3) CMV_{IN}, CMRR

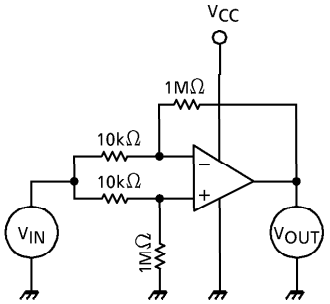

- CMRR = 20ℓog · G_D / G_C (dB)
  - G_D : DIFFERENTIAL VOLTAGE GAIN
  - G_C : COMMON MODE VOLTAGE GAIN
- CMV_{IN} : V_{IN} = 0V, V_{CC} − 1.5V SUPPLES

(4) I_{CC}

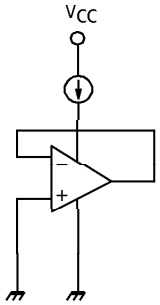

- I_{CC} : (V_{CC} = 5V)

(5) G_V

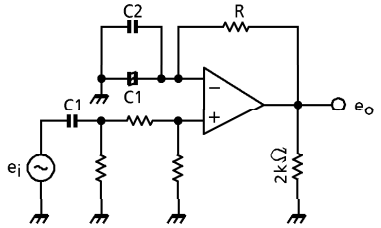

- $G_V = 20\ell og\ e_o / e_i$ (dB)
  $R \gg 1/WC1$
  C1 : COUPLING CONDENSER
  C2 : HIGH FREQUENCY BYPASS CONDENSER

(6) V_{Op-p}, I_{source}, I_{sink}

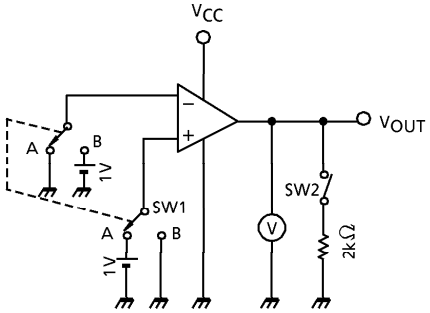

- V_{Op-p}
  V_{OH} : SW1 IS SIDE A
  V_{OL} : SW1 IS SIDE B
- I_{source}
  SW1 IS SIDE A
  $V_{OUT} \rightarrow$0V MEASURE
- I_{sink}
  SW1 IS SIDE B
  $V_{OUT} \rightarrow$5V MEASURE

CHARACTERISTICS

V_{CC} – I_{CC}

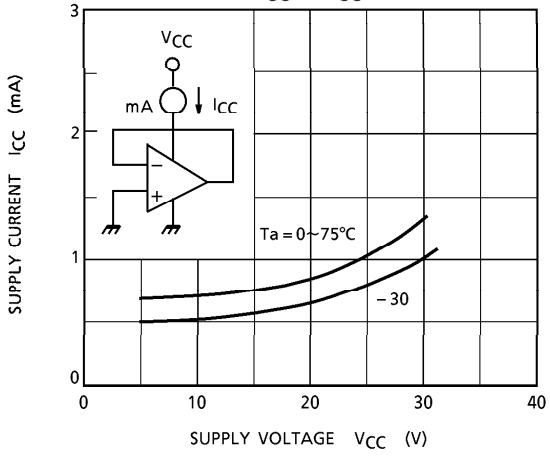

V_{CC} – I_I

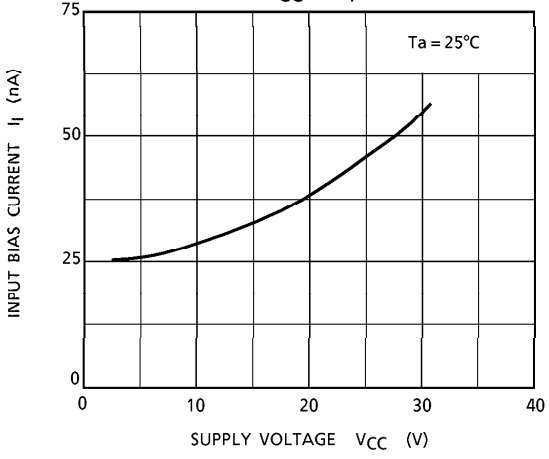

V_{CC} – G_V

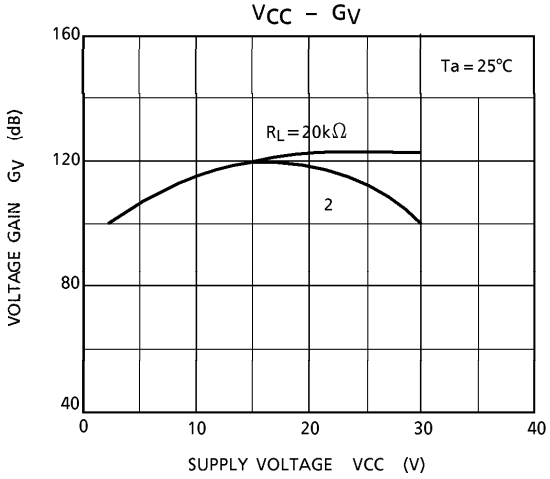

I_{SOURCE} – Ta

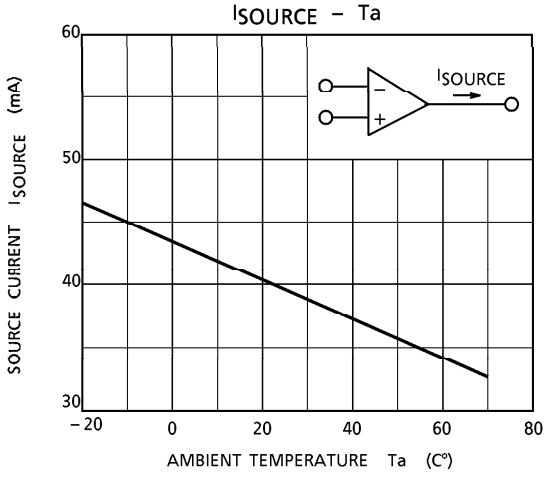

CMRR – f

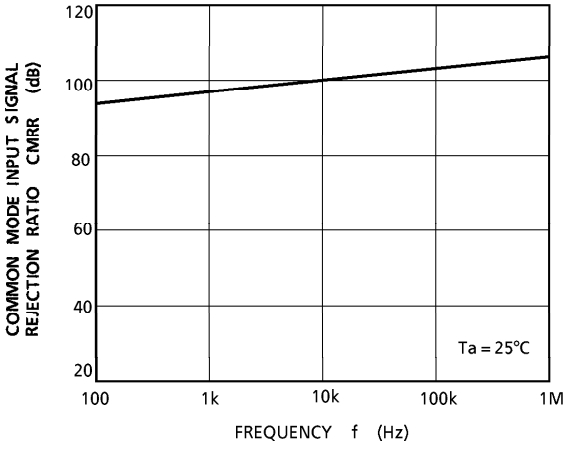

G_V – f

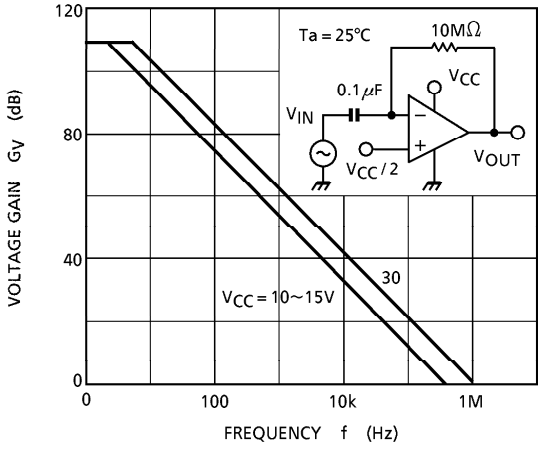

V_{Op-p} – f

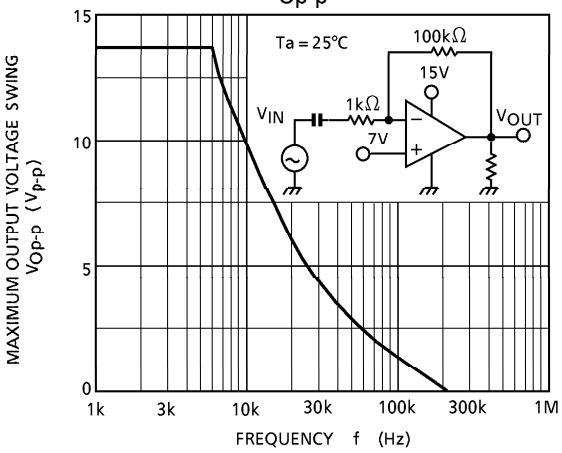

V_{IN}, V_{OUT} – t

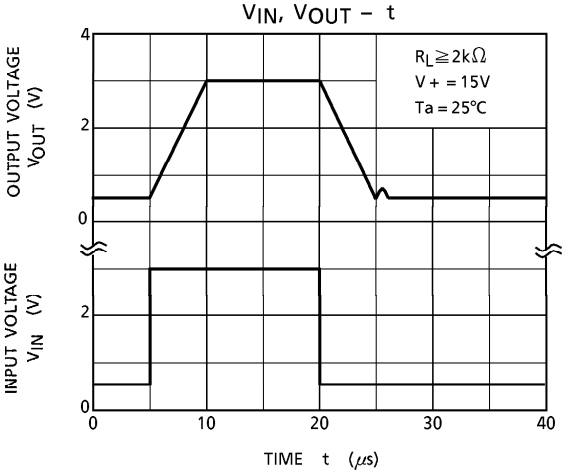

V_{OUT} – t

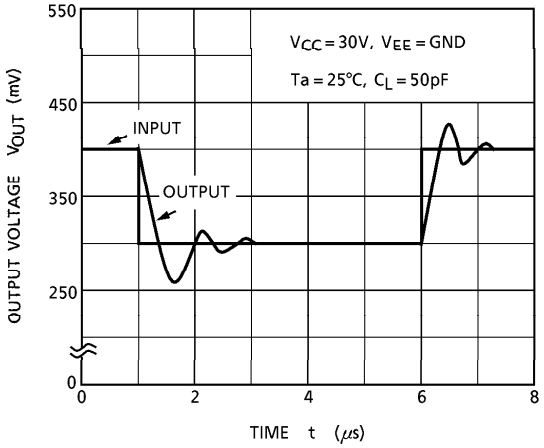

V_{OH} – I_{source}

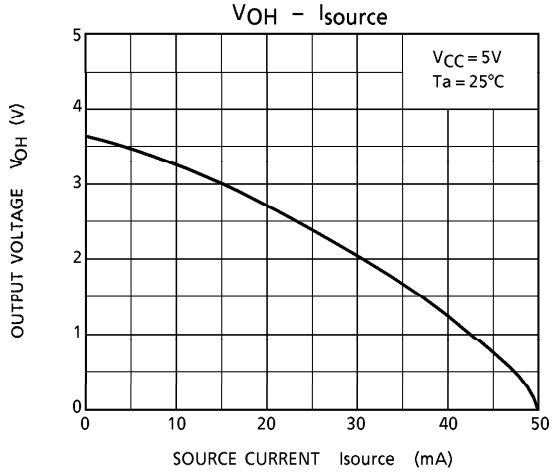

V_{OL} – I_{sink}

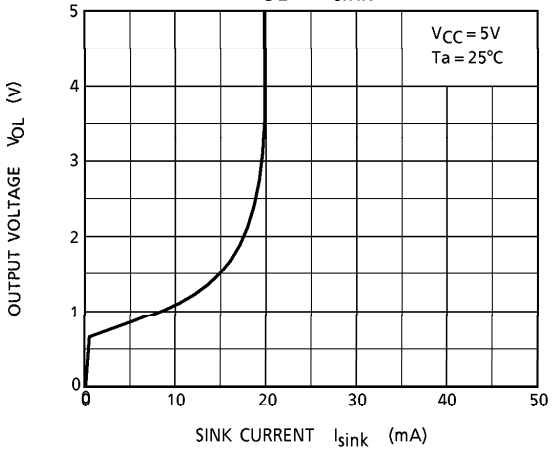

P_D – Ta

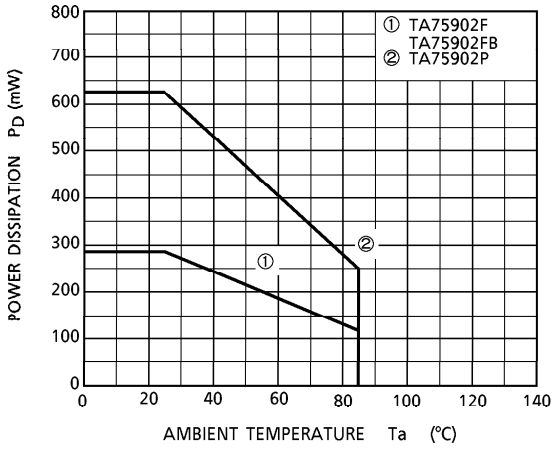

OUTLINE DRAWING

DIP14-P-300-2.54 Unit : mm

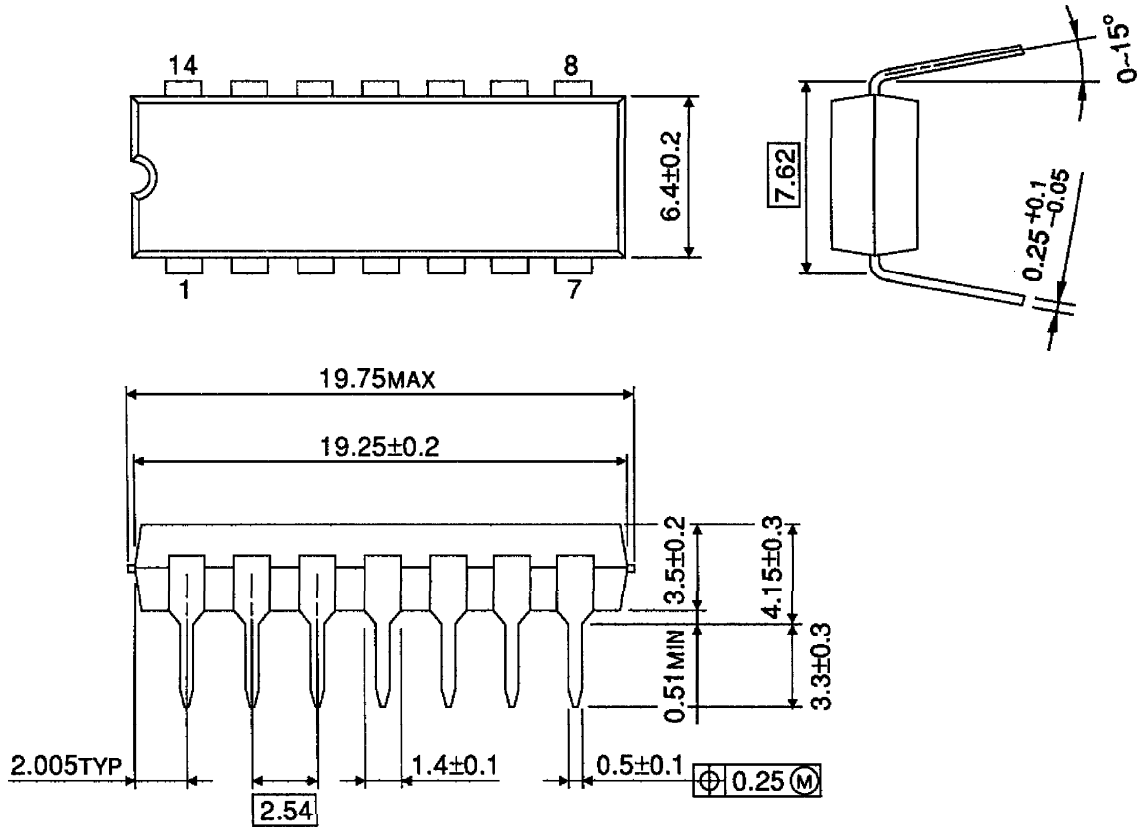

Weight : 1.0g (Typ.)

OUTLINE DRAWING

SOP14-P-225-1.27

Unit : mm

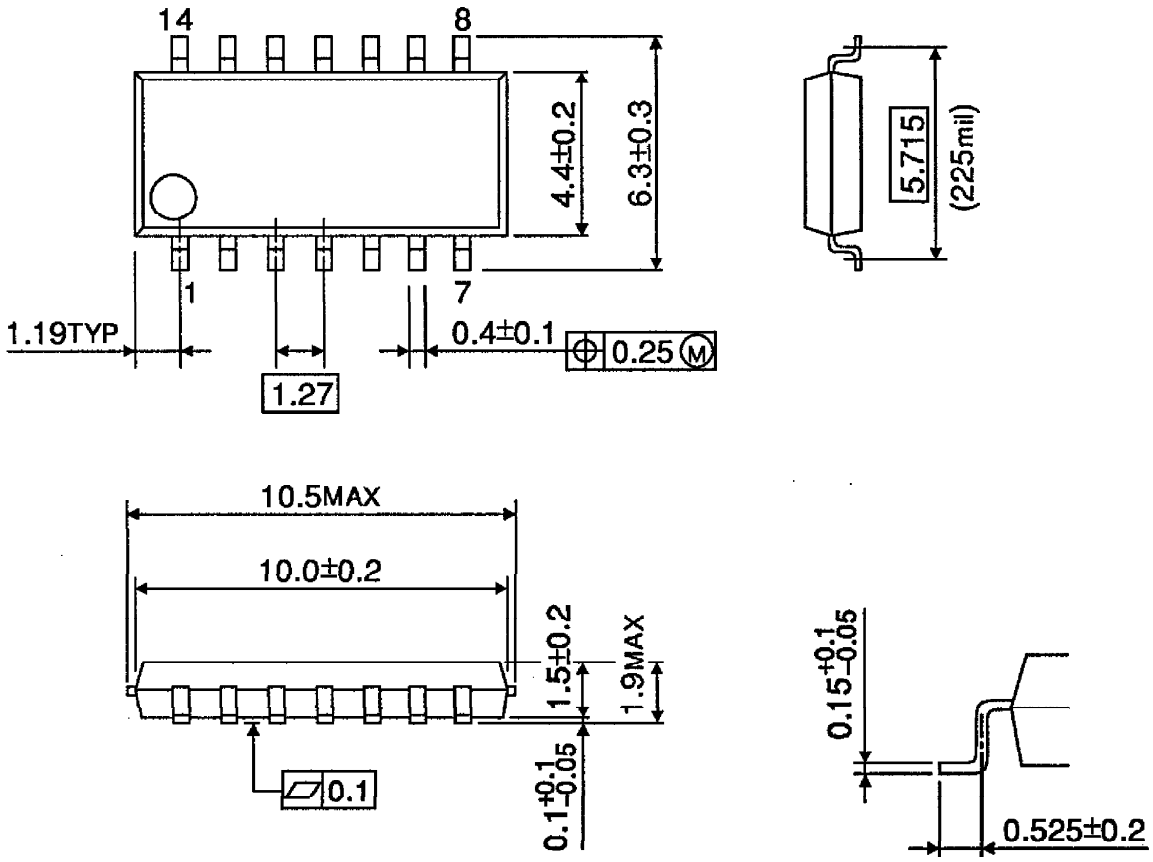

Weight : 0.2g (Typ.)

OUTLINE DRAWING

SOP14-P-225-1.27B

Unit : mm

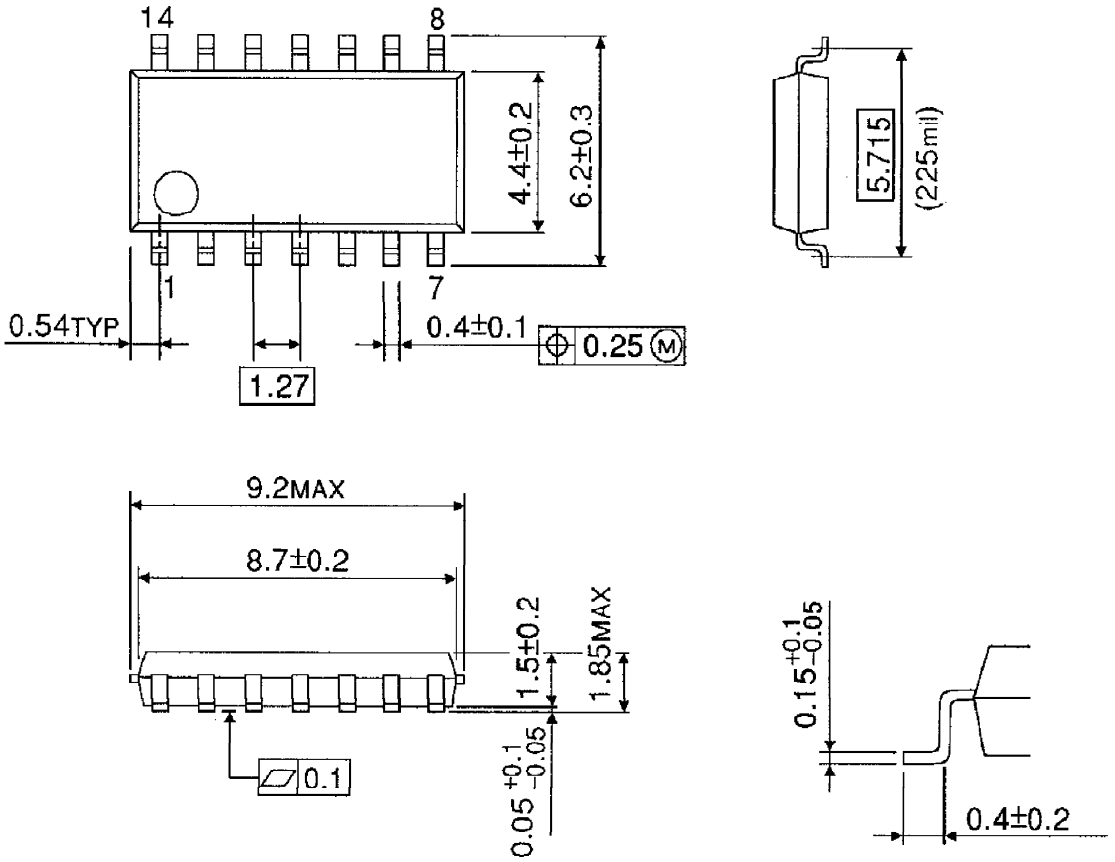

Weight : 0.2g (Typ.)

This datasheet has been downloaded from:

www.DatasheetCatalog.com

Datasheets for electronic components.