Overview

This manual will, in detail, give the information you will need to convert a 4x4 1996-1999 Nissan Pathfinder from an automatic transmission to a manual transmission. Having a manual transmission in your Pathfinder gives you more control, lower gears, and more power than you would have with an automatic. Other benefits include better gas mileage, lower maintenance cost and reduced electronic dependence.

Although the part prices and part numbers are directly from the dealership many auto recyclers will have serviceable parts at a much lower price. It is highly recommended that you contact auto recyclers in your area for the manual transmission and transfer case assembly, or transmission only in the case of 2wd vehicles.

It is assumed that the reader of this manual has moderate to advanced mechanical knowledge. Certain aspects such as the definition of common tools or how to use them will not be within the pages of this manual. Before attempting any of these procedures on your Pathfinder be aware that this is a labor intensive and time consuming operation. Parts of this operation will require the assistance of a helper.

Although this manual is designed for 1996-1999 models most of the instructions will cross over to the later 1999.5-2004 years

Notice: 2001 and later models require a different transmission than the earlier 3.3 motor.

Tools Required

3/8” Socket set with metric sizes from 8mm to 19mm
½” Socket set with metric sizes from 12mm to 27mm
3/8” Ratchet
3/8” Extensions in 3” 6” and 9” lengths
3/8” Universal joint (swivel)
½” Ratchet
½” Extensions in 3” or longer lengths
½” Breaker bar
½” Torque wrench
Open ended wrench set from 8mm to 27mm
Hydraulic jack capable of 2 tons
Transmission jack capable of holding 325lbs
Phillips head screw driver set
Standard head (flat head) screw driver set
Blind Hole Puller
Dikes
Pliers (Kline type pliers work well)
Needle nose pliers
Standard size vice grips

Parts List

Part Description for clutch activation	Part Numbers	Quantity Needed
Clutch Pedal Bracket	46550-0W501-	1
Brake Pedal and Bracket	46501-0W000-	1
Clutch Master cylinder	30610-0W050-	1
Clutch to dampener line	30850-0W000-	1
Clutch Dampener bolts	08146-6162G-	2
Clutch Dampener	30660-0W000-	1
Clutch Dampener to passenger fender line	30851-1W200-	1
Brake/Clutch transfer block	????	1
Transfer block to Slave Cylinder hose line	30851-1W211-	1
Slave Cylinder hose bracket	50915-0W010-	1
Slave Cylinder hose bracket bolt	08156-8161F-	1
Slave Cylinder hose clip	46206-2J000-	1
Slave Cylinder rubber hose	30855-0W010-	1
Slave Cylinder banjo bolt copper seals	46237-A4600-	2
Slave cylinder banjo bolt	46356-0E000-	1
Slave cylinder	30620-0W020-	1
Slave cylinder bolts	08121-0251E-	2

Driveline Parts

Clutch kit (clutch, pressure plate, throw out bearing)	NU31214-1 (AutoZone part)	1
Throw out bearing support	30501-1C100-	1
throw out bearing control arm	30531-01S00-	1
throw out bearing control arm boot	30542-75P00-	1
transmission	32010-0W020-	1
transmission isolator (mount) bolts (bottom)	11258-D0101-	2
transmission isolator (mount)	11320-1W200-	1
Transmission bolts (top)	11393-0W000-	8
bell housing bolts M10 1.50 60-80mm	01121-06291-	8
Flywheel	12310-0W000-	1
Flywheel bolts M10 1.00 30mm	12315-D0210-	6
Pilot bearing	32202-B9500-	1
Transmission shifter	32839-62G00-	1
Transmission shifter knob	32865-50Y00-	1

Interior pieces

Inspection hole cover	74810-0W000-	1
Body to transfer case and transmission mount with boots	74967-0W020-	1
Outer rubber boot with mount	74910-0W010-	1
Finisher console with boot	96934-0W010-	1

Electronic pieces

ECM for Manual transmission	23710-1W600-	1

Removing the Automatic Transmission

Before starting this procedure drain the automatic transmission fluid and transfer case fluid (4wd models). It's important to dispose of all fluids at an authorized recycling center.

1. Remove the negative battery cable.
2. Remove the crankshaft position sensor. It is located on the top driver's side of the bell housing. Keep the sensor away from magnetic devices.
3. Remove exhaust tubes from the catalytic converters all the way back.
4. Unbolt and remove the fluid change pipe from the engine and transmission. On some models this pipe will not come out until the transmission is removed.
5. Remove the oil cooler lines from the transmission and plug all open transmission holes.
6. Remove transfer control linkage on the driver side rear of the transmission. (4wd models only)
7. Remove front (4wd only) and rear driveshaft.
8. Remove the transmission control cable.
9. Disconnect all wiring harnesses from the transmission. The transmission wiring loom is located at the rear passenger side. Easy access to the loom is available if you remove the exhaust heat shield mounted on the truck's underbody.
10. Remove the starter wires and then the starter.
11. Remove both engine gussets
12. Remove the lower splash shield.
13. Remove the bolts securing the torque converter to drive plate. The torque converter bolts are easily accessed through the starter hole. (see illustration)

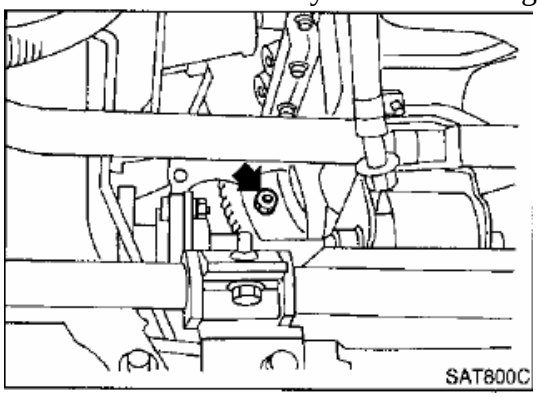

14. Remove remaining bell housing bolts and check to make sure you have removed all wires and cables from the transmission.
15. Support the automatic transmission with the transmission jack and remove the transmission cross member.
16. Lower the automatic transmission with transfer case (4wd models). Be careful not to let the torque converter slide off.

Interior Panels

1. Remove the ashtray by pulling it out. Remove the screw under the ashtray and pull out the bezel that covers the automatic transmission shifter.
2. Remove all screws holding in the center console and lift it up. Under the rear of the console unplug the rear power outlet connection.
3. Remove the automatic transmission cable on the passenger side of the automatic transmission shifter.
4. Remove the plate that the automatic transmission cable passes through and completely remove the automatic transmission cable.
5. Remove the climate control/radio bezel's screws at the bottom then pull out.
6. Remove the lower center console piece.
7. Remove the automatic transmission shifter.
8. Remove the transfer case boot from the transmission tunnel plate (4wd models).
9. Remove the transmission tunnel plate.

Clutch Installation

Warning: Do not allow grease to contaminate the clutch surface.

1. Remove the drive plate by having a helper keep the crankshaft from turning while you remove the drive plate bolts.
2. Inspect the crankshaft mounting surface and make sure no debris are in the thread holes.
3. Remove the pilot adapter for the automatic transmission using the blind hole puller. The blind hole puller is available at auto part stores for rental.

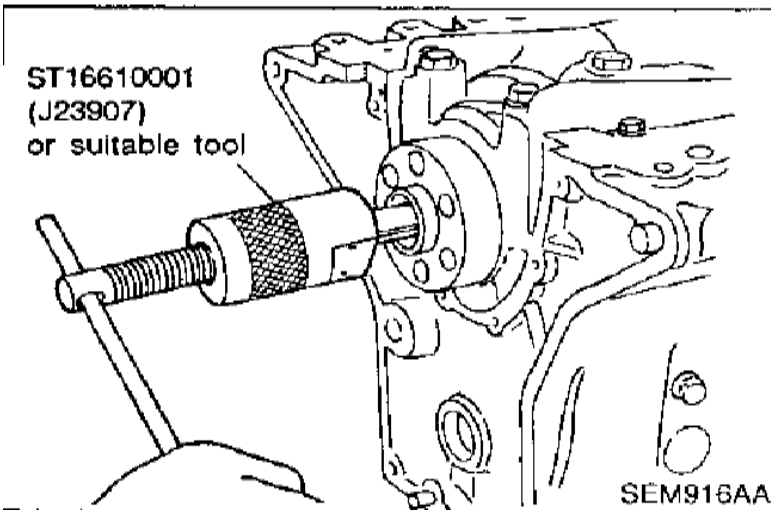

4. Install the new pilot bushing into the crankshaft.

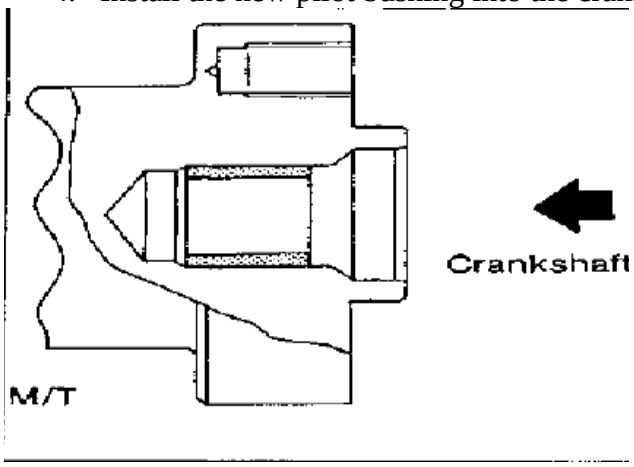

5. Place the flywheel on the crankshaft mount and install the new crankshaft bolts. (part 12315-D0210)



6. Apply grease to clutch splines.
7. Install the clutch with tool springs facing outward.

8. Install the pressure plate and bolts.
9. Tighten pressure plate bolts in a two step numerical order. (see illustration) For the first step use 7-14ft-lbs of torque. For the second step use 16-22ft-lbs of torque.

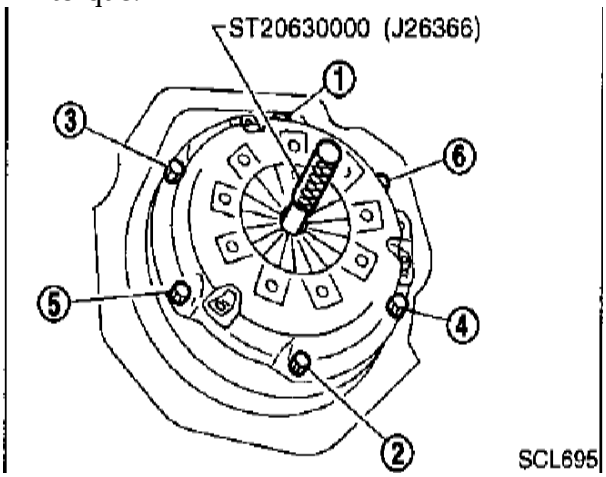

Manual transmission wiring

Before installing the manual transmission you need to make sure the neutral, reverse, 4x4 high and 4x4 low switches are in working order. To test the reverse switch simply put the transmission in reverse and check continuity, any other position should not have continuity. To test the neutral switch leave the transmission in neutral and test for continuity, any other position should not have continuity. To test the 4x4high put the transfer case in 4x4 high and test for continuity, any other position should not have continuity. To test the 4x4 low put the transfer case in 4x4 low and test the switch for continuity, any other position should not have continuity.

Once you have tested all of the applicable switches new wires must be installed from those switches to interface with the automatic's wiring. On the automatic transmission split the wiring loom apart starting at the connections end and separate each wiring bundle from the others.





The transmission position switch and its wiring harness is the device you will need to remove from the automatic after we have separated the wire bundles in the automatic transmission wiring loom. The automatic transmission position switch is pictured above to the right and it is attached with 8mm bolts.

The automatic position switch consists of several wires and two plugs. The two large wires which are colored brown and black go to their own plug. The rest of the wires go to another plug. Cut all of the wires from the automatic position switch off at the switch leaving most of the wires attached to the plugs. You can set aside the plug with the two large brown and black wires, you will use this later.

The two wires you will need from the automatic position switch wiring harness are the black wire and the green wire. The black wire (I removed the "s" from wires) provides ignition on power and the green wire goes to the backup lights. These two wires need to be hooked to the reverse switch on the manual transmission in any order. When you are finished the reverse switch on the manual transmission should have a long set of wires attached to it with the automatic position switch plug at the very end. The automatic position switch plug will plug into the existing wiring harness and provide you with backup lights when shifting into reverse using the existing circuit.

The last step to complete the manual wiring is wiring the neutral switch. Take the plug with the two large gauge brown and black wires and wire it onto the neutral position switch. Either the brown or black plug wires can go to either of the switch wires as the neutral switch simply provides continuity. Once the plug is wired into the neutral switch simply plug into the existing truck wiring.

Installing the Manual Transmission

1. Support the manual transmission with transfer case (4wd models) on the transmission jack. Leave the transmission in 4th gear and the transfer case in 4wd high (4wd models).
2. Remove the transmission and transfer case (4wd models) shifters before installing the manual transmission in the truck.
3. Apply sealant to the bell housing as shown in the diagram from the Nissan Factory Service Manual below.

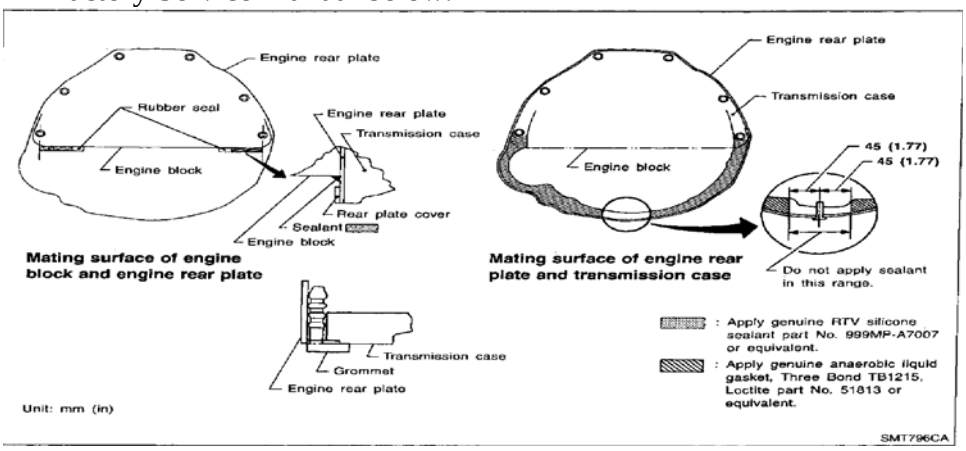

4. Make sure you have removed the clutch alignment tool from the clutch.
5. Lift the transmission and work it into the engine, you can use your hand to turn the front transfer case output shaft to help align the clutch splines with the input shaft splines (4wd model).
6. Use the diagram from the Nissan Service Manual below for bolt torque sequence. Don't forget to use your new bell housing bolts as the bolts for the automatic are not long enough.

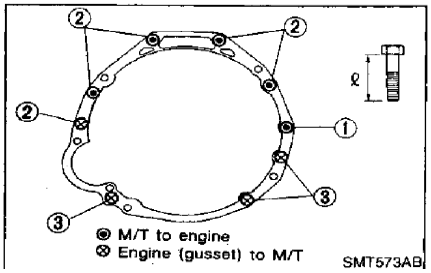

● Tighten bolt securing transmission.

Bolt No.	Tightening torque N·m (kg-m, ft-lb)	ℓ mm (in)
1	39 - 49 (4.0 - 5.0, 29 - 36)	65 (2.56)
2	39 - 49 (4.0 - 5.0, 29 - 36)	58 (2.28)
3	29 - 39 (3.0 - 4.0, 22 - 29)	25 (0.98)
Gusset to engine	29 - 39 (3.0 - 4.0, 22 - 29)	20 (0.79)

7. Refer to appendix A for information on converting the automatic transmission mount to work on the manual transmission, or install the manual transmission mount on the transmission cross member.
8. Reinstall the transmission cross member.
9. Reinstall the front (4wd models) and rear drive shaft.
10. Reinstall the starter and wiring.
11. Plug in all electrical connections.
12. Reinstall any other items not mentions specific to your Pathfinder.

Interior Reinstallation

1. Reinstall the transmission and transfer case (4wd models) shifters.
2. Install the new outer manual transmission tunnel cover. (part number 74967-0W020)
3. Install the inner transmission tunnel cover with boots. (part number 74910-0W010)
4. Reinstall all interior components removed.
5. Install the new outer shifter cover.
   (part number 74910-0W010)

Electronic Control Module Replacement

Information about the Nissan ECM: There are several odd year breaks in the model of ECM required. Below is a listing of ECM part number and the month/year that part number applies to.

Build Date	Part Number
1095-0796	23710-0W000-
0796-1296	23710-1W201-
1296-0797	23710-1W203-
0797-0398	23710-1W600-
0398-0998	23710-1W602-
0998-1298	23710-1W608-
1298-0999	23710-2W601-
0999-0100	23710-2W602-

The above parts list only applies to vehicles with the VG33 motor and vehicles with FED emissions.

1. Make sure the negative battery cable is disconnected.
2. Remove the existing ECM from under the dash above the accelerator pedal. It's easiest to remove the plastic panel under the steering column.
3. Using a 10mm socket unbolt the ECM's electrical connector and unplug.
4. Plug in the electrical connector to the new ECM and tighten the 10mm bolt.
5. Reinstall the ECM.

The date of manufacture for your vehicle can be located on the stamp on the inside of the driver's door.