Power Door Lock (Super Lock)

WIRING DIAGRAM

For Russia

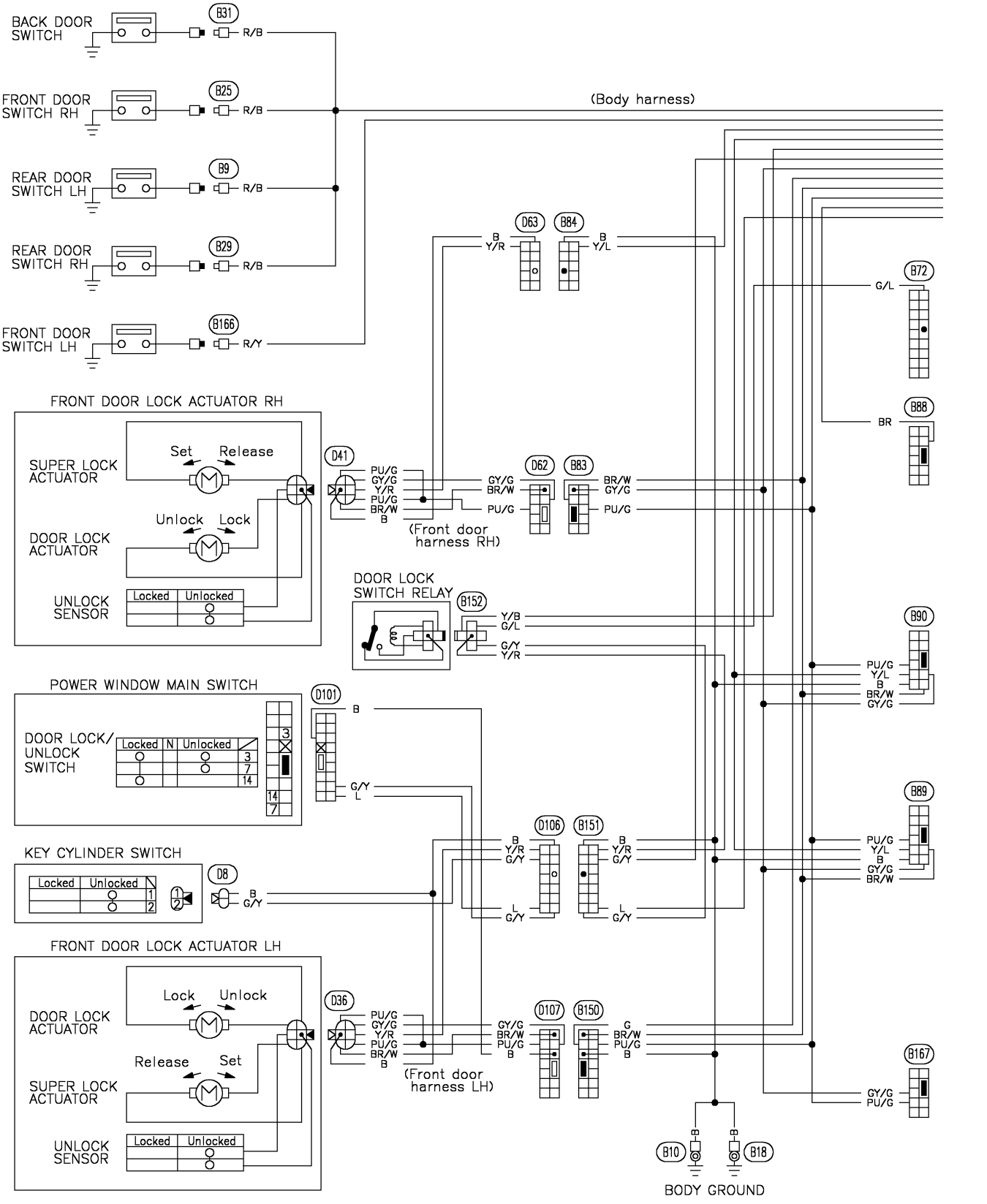

YBF328

Power Door Lock (Super Lock) (Cont'd)

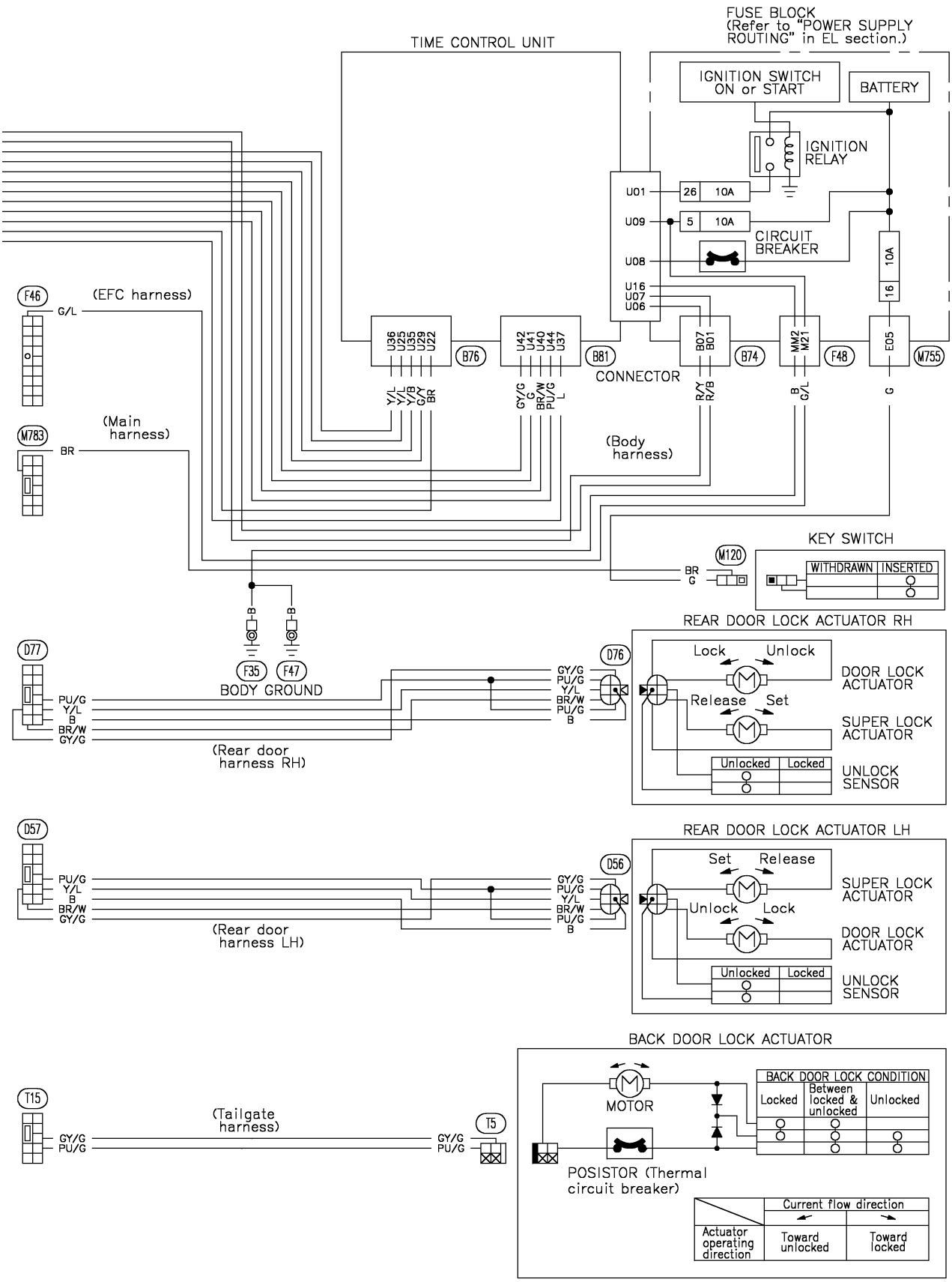

YBF313