## Wiring Diagram

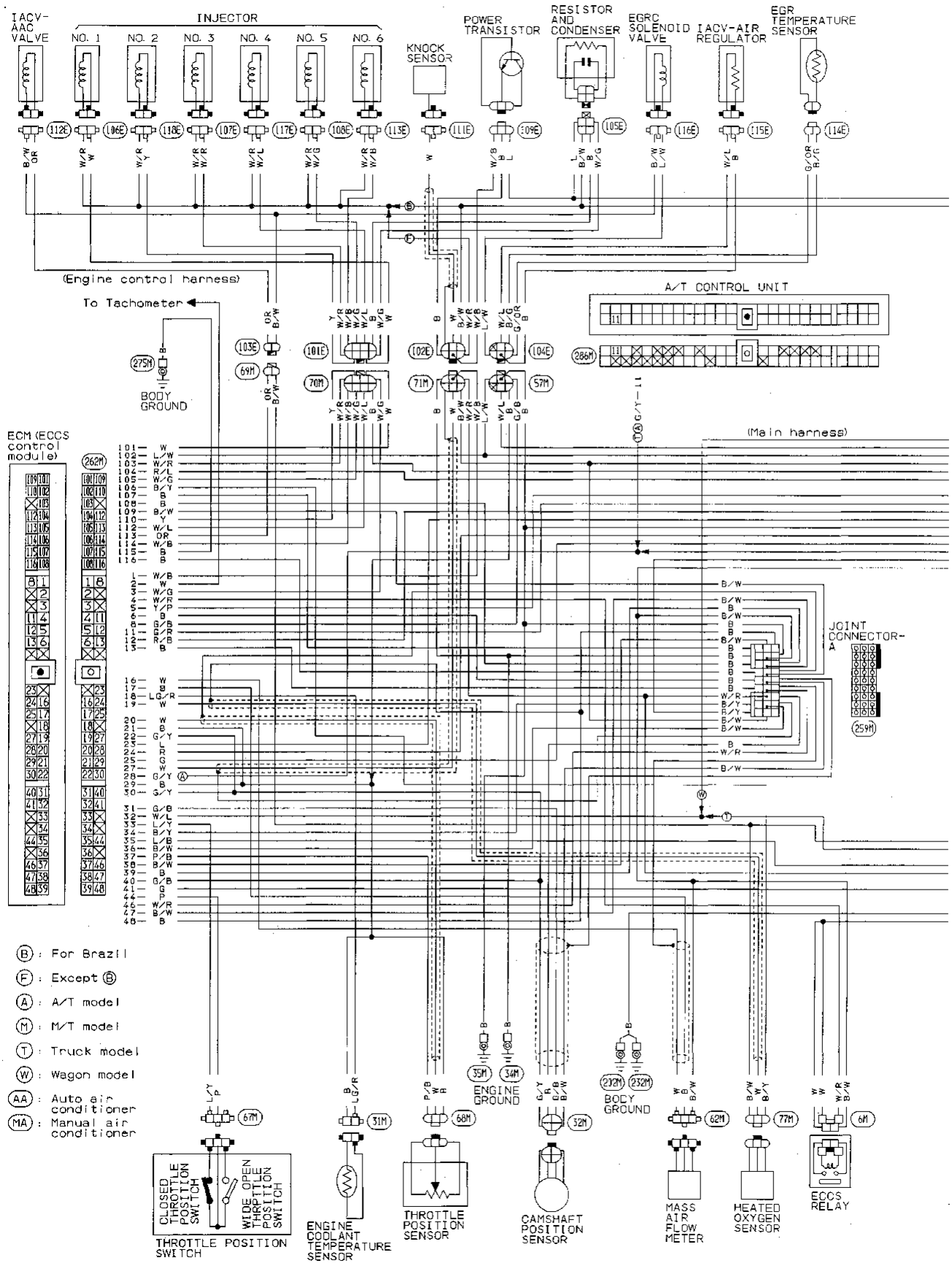

## Wiring Diagram (Cont'd)

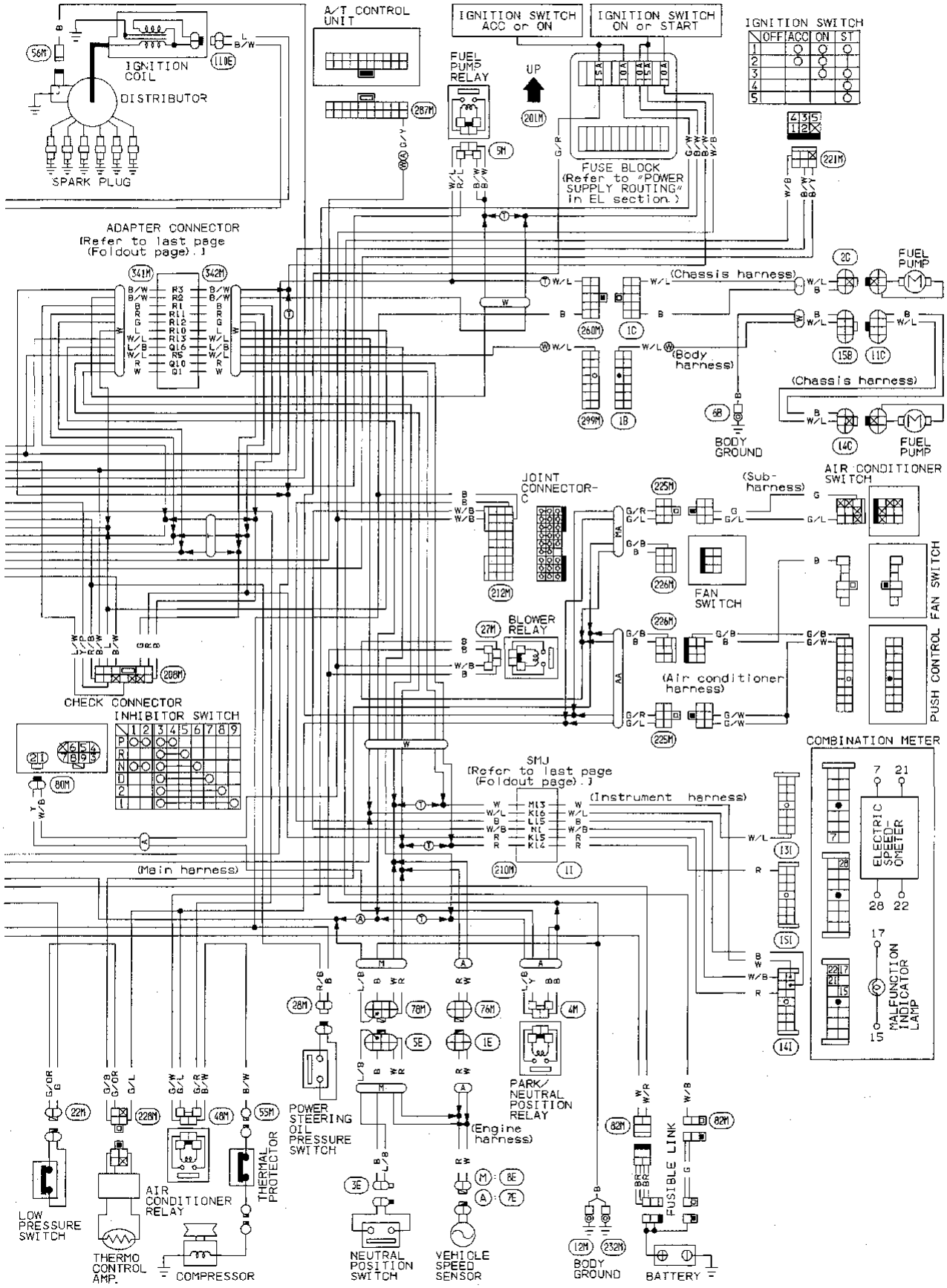


SEF770N

## Circuit Diagram

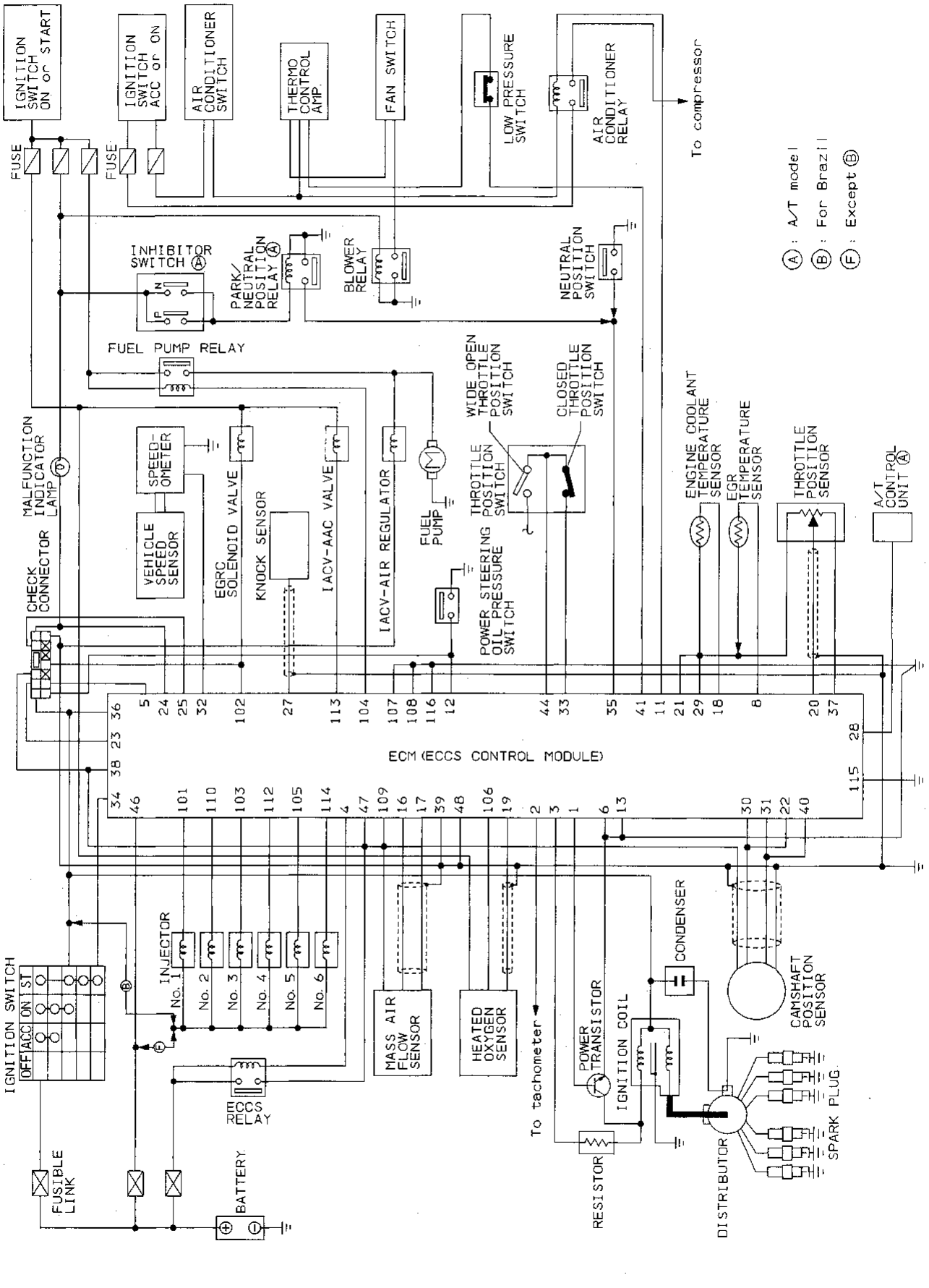


SEF771N